Menu

LONCIN

1" Water Pump

LC25ZB21-1.2Q（J5513）



SPARE PARTS CATALOGUE

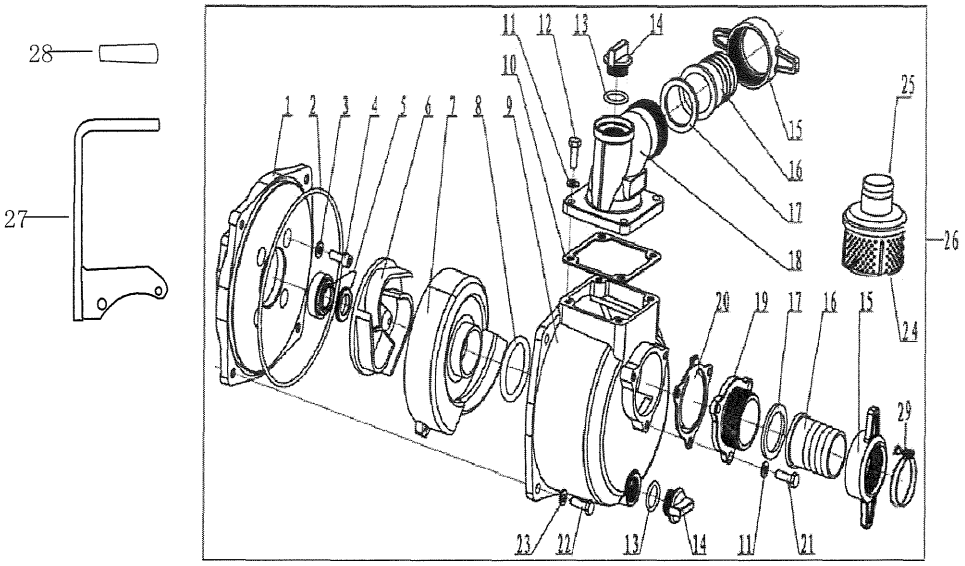

PUMP

No.	Part No.	Description	QTY
1	660190008-0001	PUMP COVER	1
2	380840620-0001	O-RING 160×4	1
3	660830004-0001	WASHER,SEALING	4
4	380190135-0002	SOCKET HEAD CAP SCREW	4
5	660350009-0001	MACHINERY SEAL	1
6	660200010-0001	WATER PUMP IMPELLER	1
7	660210008-0001	VOLUTE CASING	1
8	380840497-0001	O-RING	1
9	660220008-0001	HOUSING OF PUMP	1
10	660260008-0001	FLANGE, OUTPUT	1
11	380450004-0003	WASHER 6X13X1.2	7
12	380070034-0003	BOLT M6X18	4
13	380840671-0001	O-RING	2
14	660240006-0001	PLUG	2
15	660270009-0001	LINKERM, TUBE	2
16	660280007-0001	TIE-IN, TUBE	2
17	380840496-0001	GASKET,TUBE LINKER	2
18	660250007-0001	FLANGE, OUTPUT	1
19	660230007-0001	FLANGE, ENDURE PRESS	1
20	660320008-0001	CHECK VALVE	1
21	380070034-0003	ENGINE M6X18	3
22	380070018-0004	ENGINE M8X20	4
23	380450003-0006	FLAT WASHER	4
24	660300007-0001	FILTER	1
25	660290007-0001	COVER , FILTER	1
26	660180028-0001	PUMP COMP	1
27	660960001-0001	WATER PUMP HANDLE BODY	1
28	660970001-0001	WATER PUMP HANDLE RUBBER LAGGING	1
29	380960118-0001	LOOP, TUBE	2

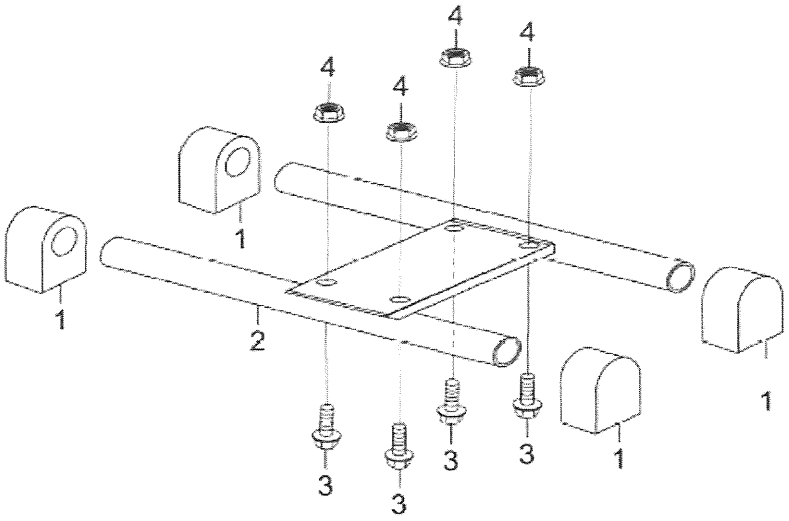

STAND

No.	Part No.	Description	QTY
1	300770002-0001	RUBBER, SHOCK ABSORBER	4
2	300720037-0001	FRAME	1
3	380140040-0005	BOLT,FLANGE	4
4	380370007-0004	NUT,FLANGE	4

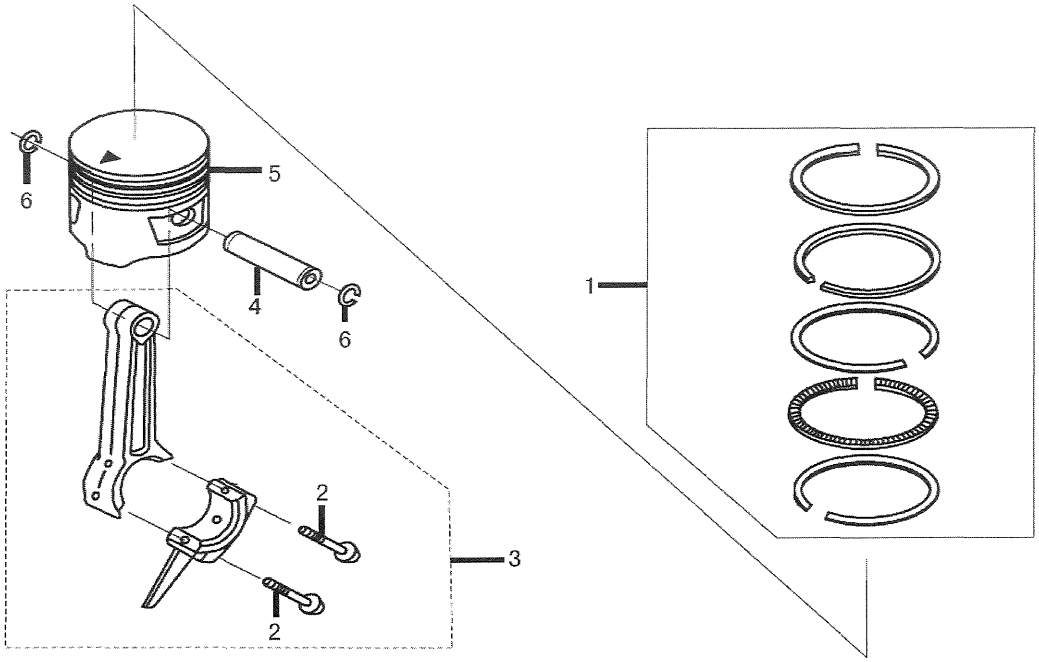

PISTON & CONNECTING ROD

No.	Part No.	Description	QTY
1	130070084-0001	RING SET	1
2	130180007-0001	BOLT,CONNECTING ROD	2
3	130150045-0001	ROD ASSY ., CONNECTING	1
4	130060036-0001	PIN,PISTON	1
5	130030086-0001	PISTON	1
6	380560059-0001	CLIP PISTON PIN	2

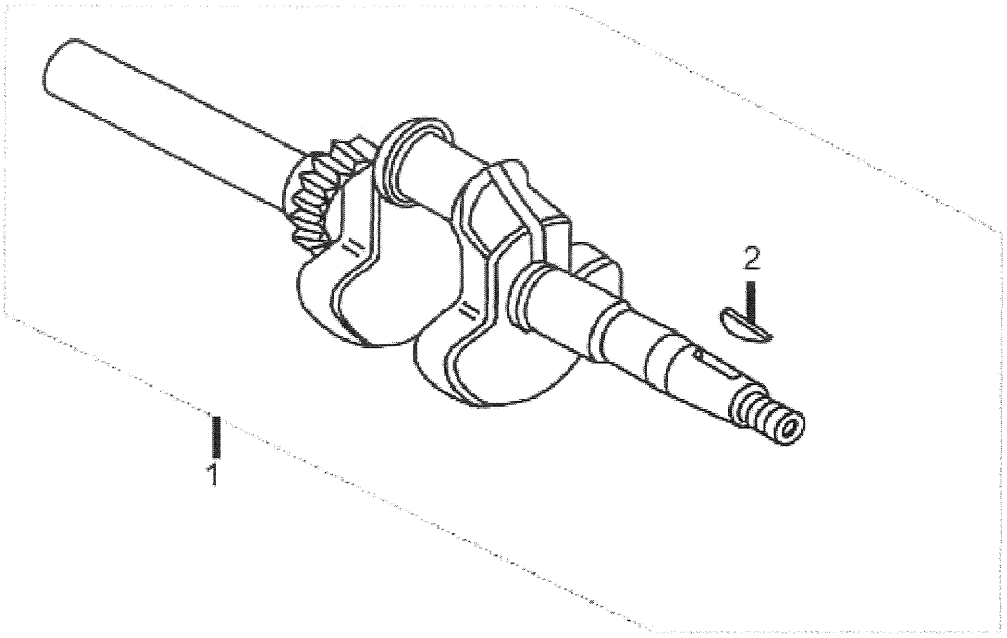

CRANKSHAFT

No.	Part No.	Description	QTY
1	130290222-0001	CRANKSHAFT COMP	1
2	380620070-0001	KEY	1

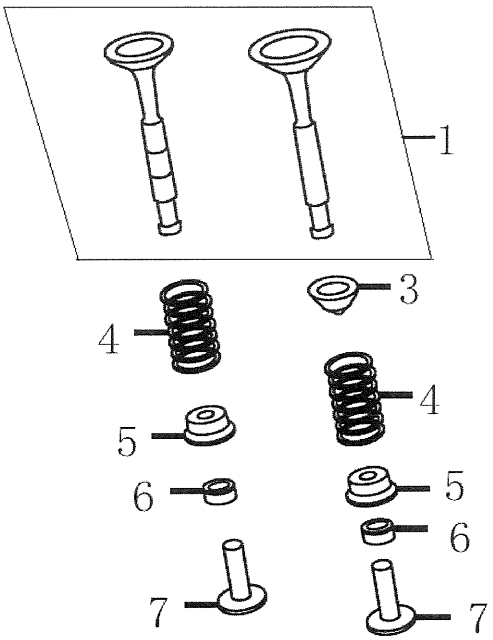

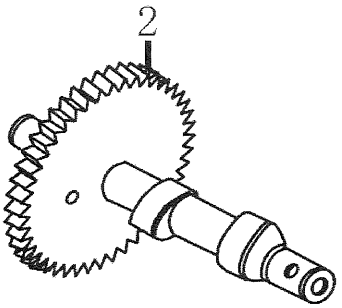

CAMSHAFT & VALVES

No.	Part No.	Description	QTY
1	500550026-0001	VALVE COMP.	1
2	140020092-0001	CAMSHAFT ASSY.	1
3	140400013-0001	SEAL , GUIDE	1
4	140340024-0001	SPRING,VALVE	2
5	140380019-0001	RETAINER,VALVE SPRING	2
6	140320003-0001	ROTATOR,VALVE	2
7	140690008-0001	LIFTER VALVE	2

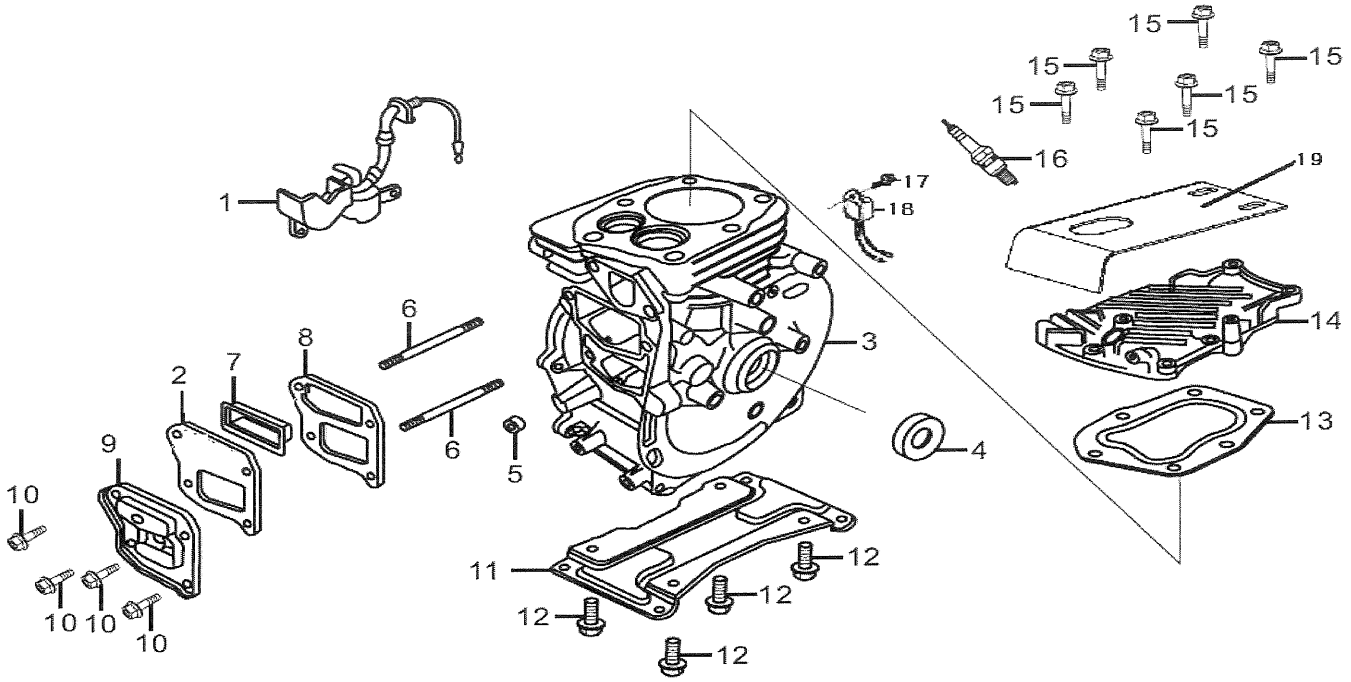

CRANKCASE

No.	Part No.	Description	QTY
1	281850155-0001	OIL LEVEL SWITCH	1
2	110850013-0001	PKG,BRTHR COVER	1
3	110810162-0001	CRANK CASE	1
4	380650333-0001	OIL SEAL	1
5	380650340-0001	OIL SEAL	1
6	380180100-0001	BOLT,STUD	2
7	110930001-0002	COVER,BREATHER CHAMBER	1
8	110850008-0001	PKG,BRTHR COVER	1
9	110840004-0001	COVER COMP.,BREATHER	1
10	380140332-0001	BOLT,FLANGE	4
11	110800001-0001	ENGINEBASE	1
12	380140040-0005	BOLT,FLANGE	4
13	120150154-0001	GASKET , CYLINDER	1
14	120220010-0001	COVER COMP,HEAD	1
15	380140100-0003	BOLT,FLANGE	6
16	270960027-0001	PLUG , SPARK	1
17	380140089-0003	BOLT,FLANGE	1
18	281890001-0001	ALERT UNIT,OIL	1
19	160190038-0001	SHROUD COMP	1

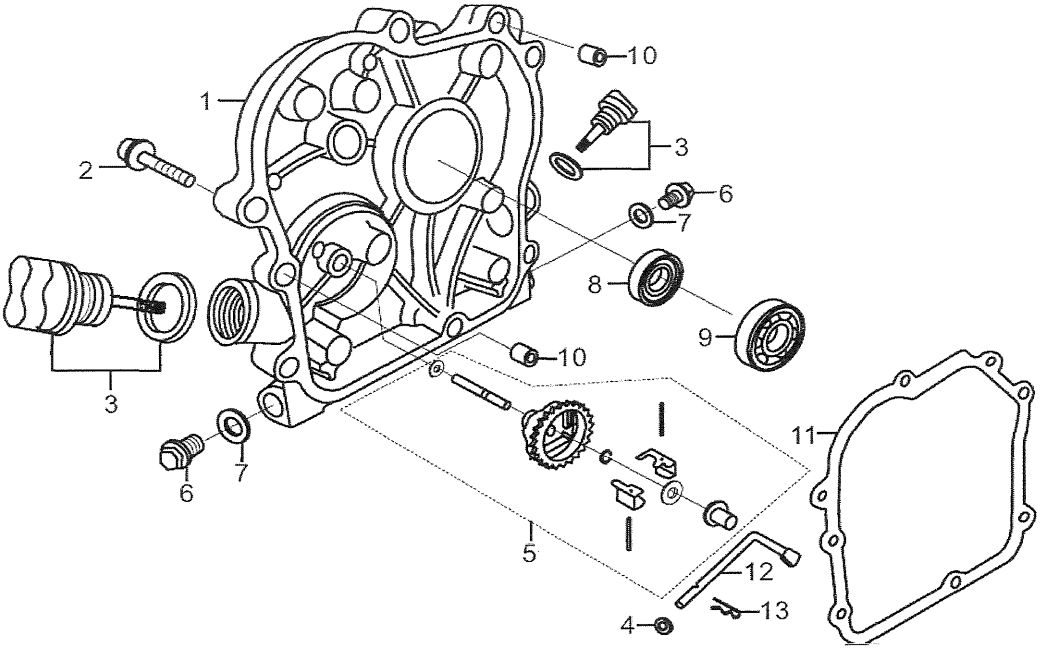

CRANKCASE COVER

No.	Part No.	Description	QTY
1	110820048-0001	CASE COVER	1
2	380140024-0006	BOLT,FLANGE	6
3	110690035-0001	OIL CAP	2
4	380450519-0001	FLAT WASHER	2
5	171750007-0001	GOVERNOR GEAR ASSY.	1
6	110260025-0001	BOLT,DRAIN PLUG	2
7	380450514-0001	WASHER , DRAIN PLUG	2
8	380650333-0001	OIL SEAL	1
9	380630002-0001	BEARING	1
10	380600120-0001	PIN,DOWEL	2
11	110830022-0001	PACKING,CASE COVER	1
12	171630004-0001	SHAFT,GOVERNOR ARM	1
13	381350006-0001	PIN,LOCK	1

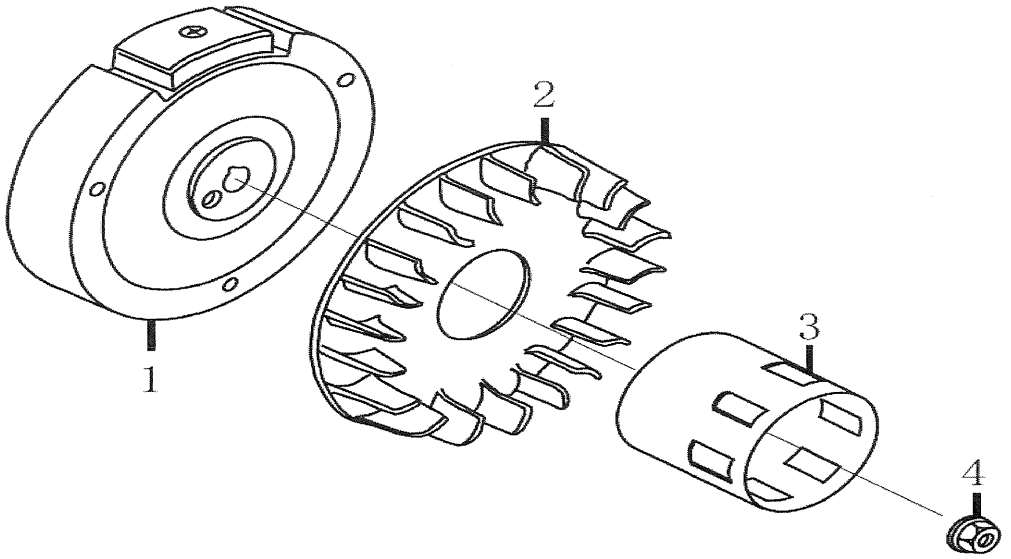

FLYWHEEL

No.	Part No.	Description	QTY
1	270020082-0001	FLYWHEEL COMP	1
2	160180010-0001	FAN,COOLING	1
3	193590009-0001	PULLEY,STARTER	1
4	380370049-0001	NUT,FLANGE	1

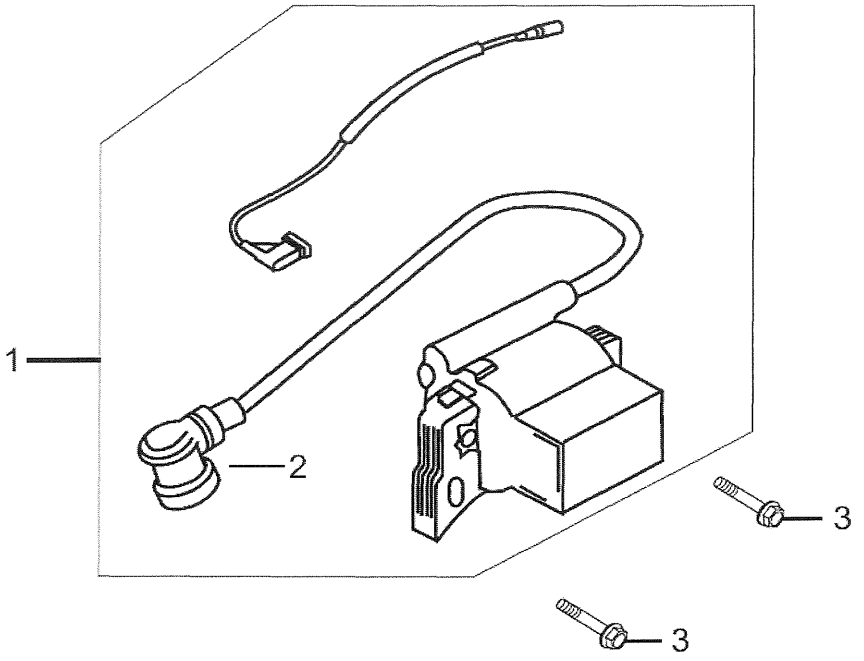

IGNITION COIL

No.	Part No.	Description	QTY
1	270920171-0001	COIL ASSY.,IGNITION	1
2	270950067-0001	CAP ASSY NOISE SUPPRESSOR	1
3	380140086-0002	BOLT,FLANGE	2

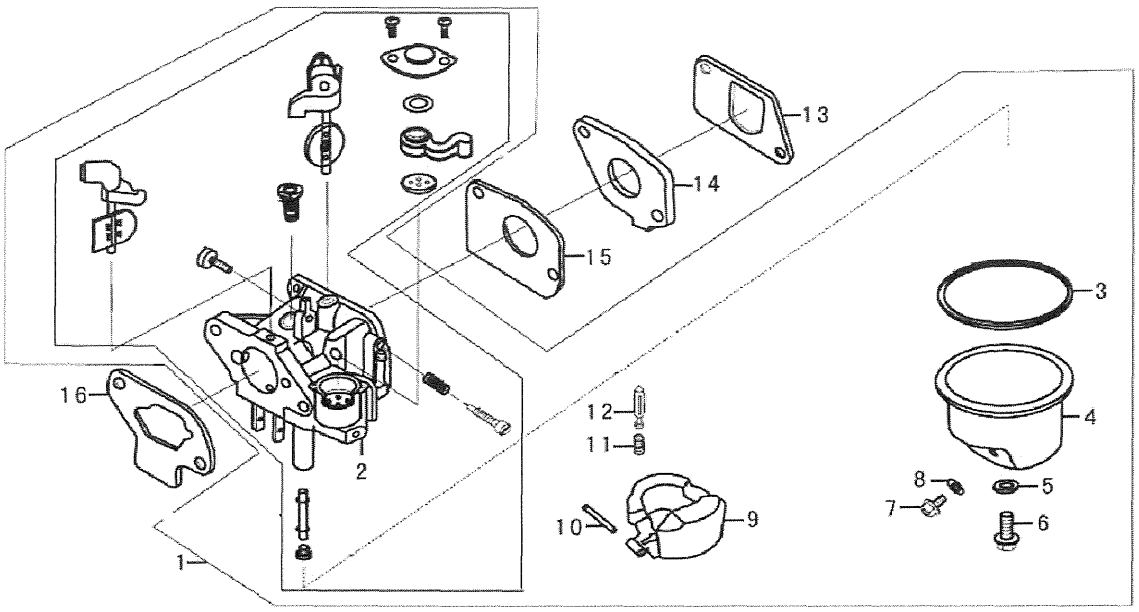

CARBURETTOR

No.	Part No.	Description	QTY
1	170021060-0001	CARBURETOR ASSY	1
2	170160034-T010	CARBURETOR'S NOUMENON	1
3	380840463-0001	GASKET , OIL CUP	1
4	170250025-0001	OIL CUP	1
5	380450547-0001	FLAT WASHER	1
6	380140355-0001	BOLT , OIL CUP	1
7	172930001-0001	BOLT ,DRAIN	1
8	380450577-0001	GASKET , DRAIN BOLT	1
9	170280021-0001	FLOAT	1
10	170290018-0001	PIN , FLOAT	1
11	381150347-0001	SPRING , VALVE SET	1
12	170180052-0001	VALVE , FLOAT	1
13	170430001-0001	PACKING,INSULATOR	1
14	170440046-0001	INSULATOR,CARBURETOR	1
15	170430089-0001	PACKING.,CARBURETOR	1
16	170430084-0001	GASKET,AIR CLEANER	1

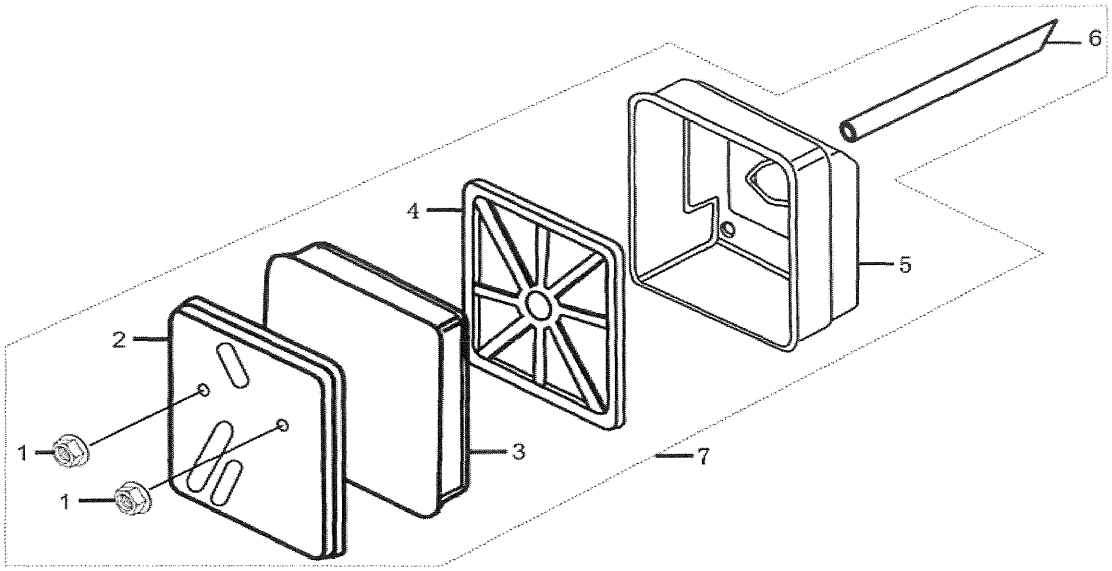

AIR CLEANER

No.	Part No.	Description	QTY
1	380370012-0005	NUT,FLANGE	2
2	180070090-0001	COVER,AIRCLEANER	1
3	180100040-0001	ELEMENT ASSY.,AIR CLEANER	1
4	180330023-0001	NOSE , SILENCER	1
5	180280009-0001	ELBOW COMP.,AIR CLEANER	1
6	380740470-0001	TUBE,BREATHER	1
7	180020323-0001	AIR CLEANER ASSY	1

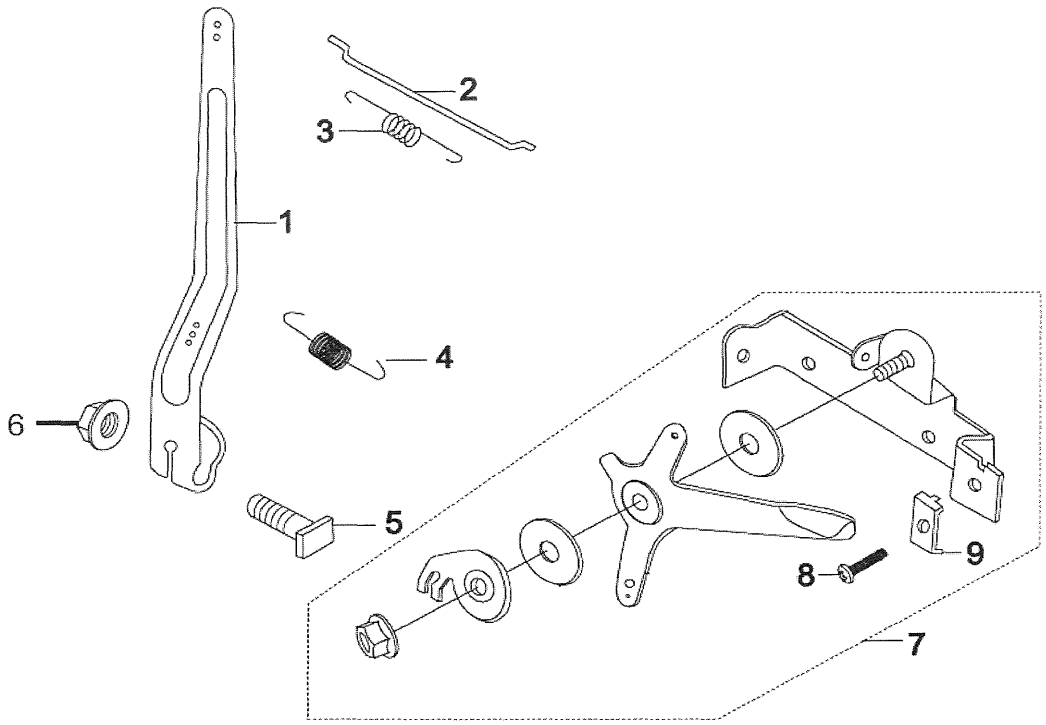

CONTROL

No.	Part No.	Description	QTY
1	171620007-0001	SHAFT,GOVERNOR ARM	1
2	171590008-0001	ROD,GOVERNOR	1
3	171610007-0001	SPRING,THROTTLE RETURN	1
4	171600009-0001	SPRING,GOVERNOR	1
5	380250002-0001	BOLT,STUD	1
6	380370048-0001	NUT,FLANGE	1
7	171680017-0001	CONTROL ASSY.	1
8	380200035-0002	SCREW,PAN	1
9	171710003-0001	BACK PLATE,DRAGLINE	1

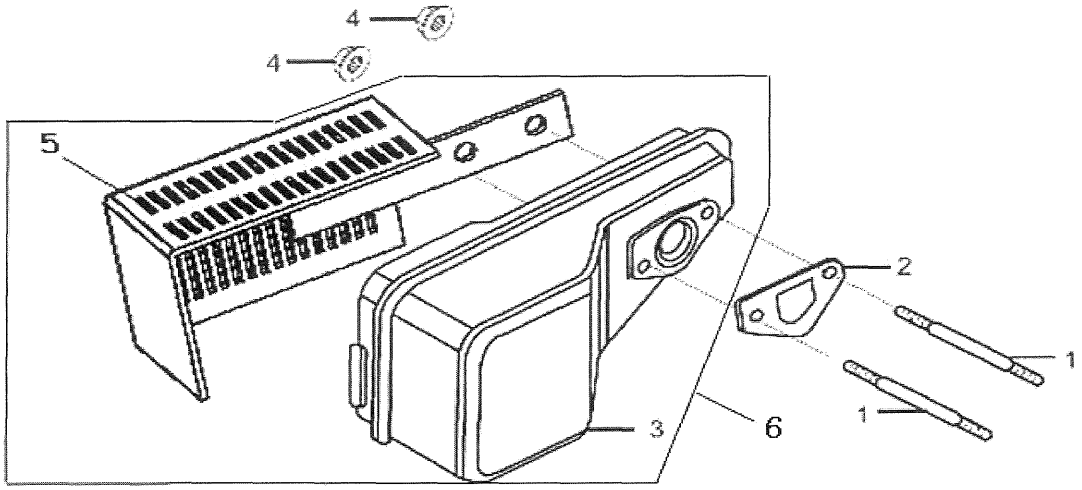

EXHAUST

No.	Part No.	Description	QTY
1	380180094-0001	BOLT,STUD	2
2	180660053-0001	GASKET,EX.PIPE	1
3	180690098-0001	MUFFLER COMP	1
4	380370048-0001	NUT,FLANGE	2
5	180960018-0001	INNER PIPE ASSY,MUFFLER	1
6	180570786-0001	MUFFLER ASSY	1

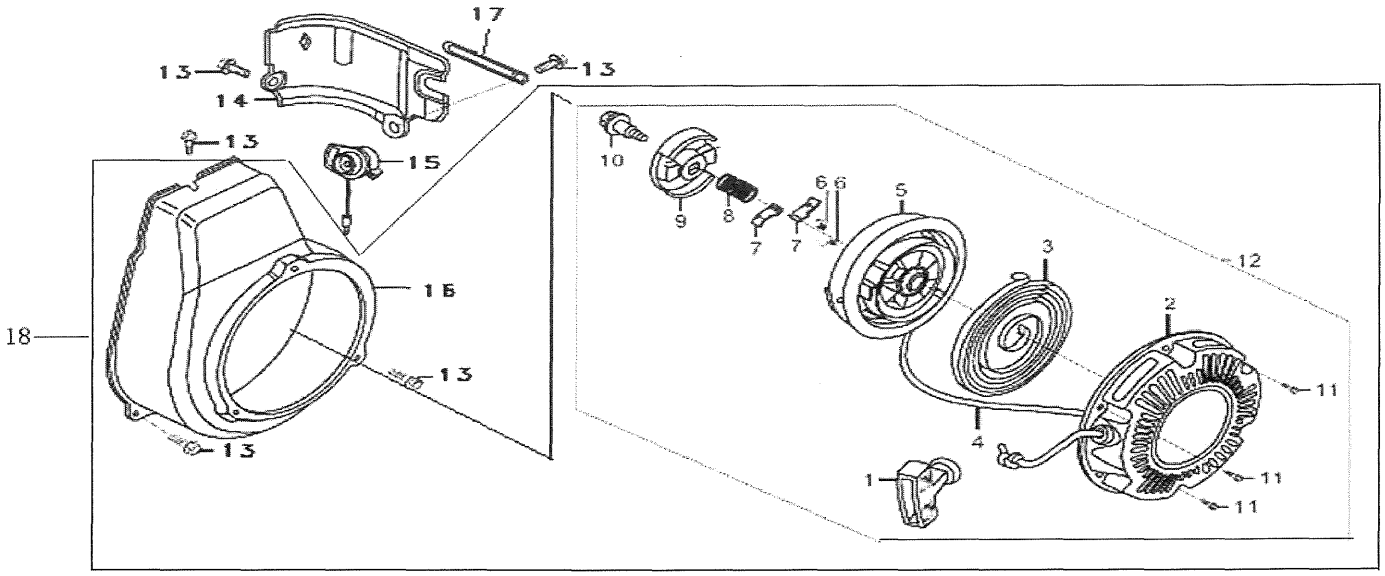

RECOIL STARTER

No.	Part No.	Description	QTY	
1	193560015-0001	KNOB,RECOIL STARTER	1	
2	193640001-0001	COVER,REEL,STARTER	1	
3	193340022-0001	SPRING,RECOIL STARTER	1	
4	193530007-0001	ROPE	1	
5	193520007-0001	REEL,RECOIL STARTER	1	
6	381160092-0001	SPRING,RETURN	2	
7	193540006-0001	RATCHET , STARTER	2	
8	381150345-0001	SPRING,FRICTION	1	
9	193550007-0001	GUIDE,RATCHET	1	193500114-0001
10	380020066-0001	SCREW,SETTING	1	
11	380140089-0003	BOLT,FLANGE	3	
12	193500114-0001	STARTER ASSY,RECOIL	1	
13	380140001-0006	BOLT,FLANGE,	5	
14	160190007-0001	SHROUD COMP	1	
15	271660031-0001	SWITCH ASSY.,ENGINE STOP	1	
16	160210004-0003	COVER COMP.,FAN	1	
17	380940346-0001	TIE,CABLE	1	
18	193490001-0002	RECOIL STARTER COMP.	1	

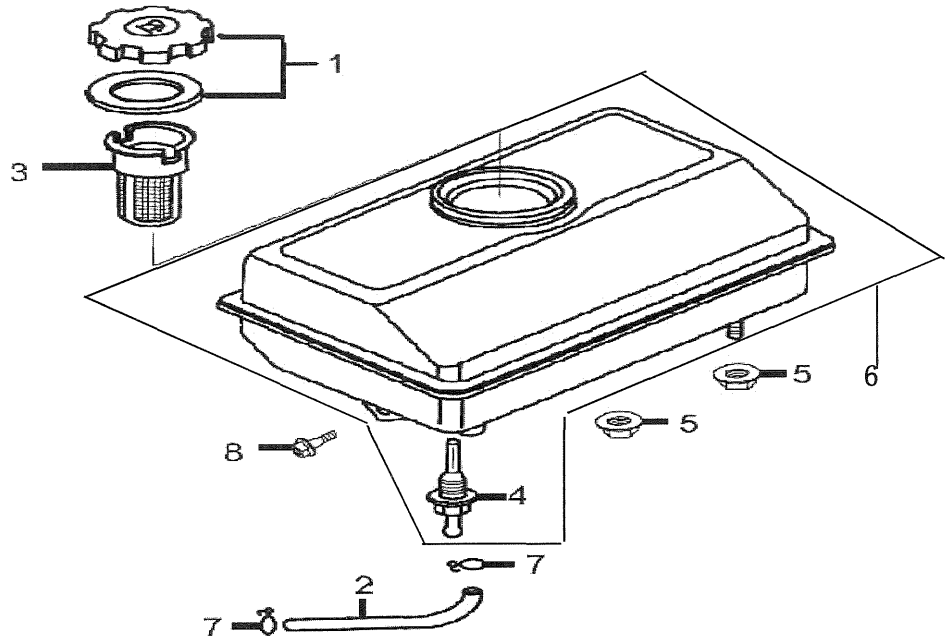

FUEL TANK

No.	Part No.	Description	QTY
1	170870039-0001	CAP COMP.,FUEL FILLER	1
2	380750279-0001	TUBE,FUEL	1
3	170720001-0001	FILTER,FUEL	1
4	170660077-0001	JOINT ASSY.,FUEL TANK	1
5	380370048-0001	NUT,FLANGE	2
6	170500514-0002	TANK COMP.,FUEL	1
7	380950188-0001	PIPE CLIP	2
8	380140089-0003	BOLT,FLANGE	1