PARTS LIST



2026.01.15

NILFISK

TABLE OF CONTENTS

Connection plate 7 1
Cylinder block 7 3
Default accessories 5
Electrical components 18H 7
Electrical components 36H, 54H 9
Heating tank 12
Motor 7 14
Overview 1 17
Overview 2 19
Recommended spare parts 21
Unloader 7 (a) 24
Unloader 7 (b) 26

Connection plate 7

SOLAR BOOSTER 7-58 / SH SOLAR 170/1200 E

2017.11.02

2015.08.05

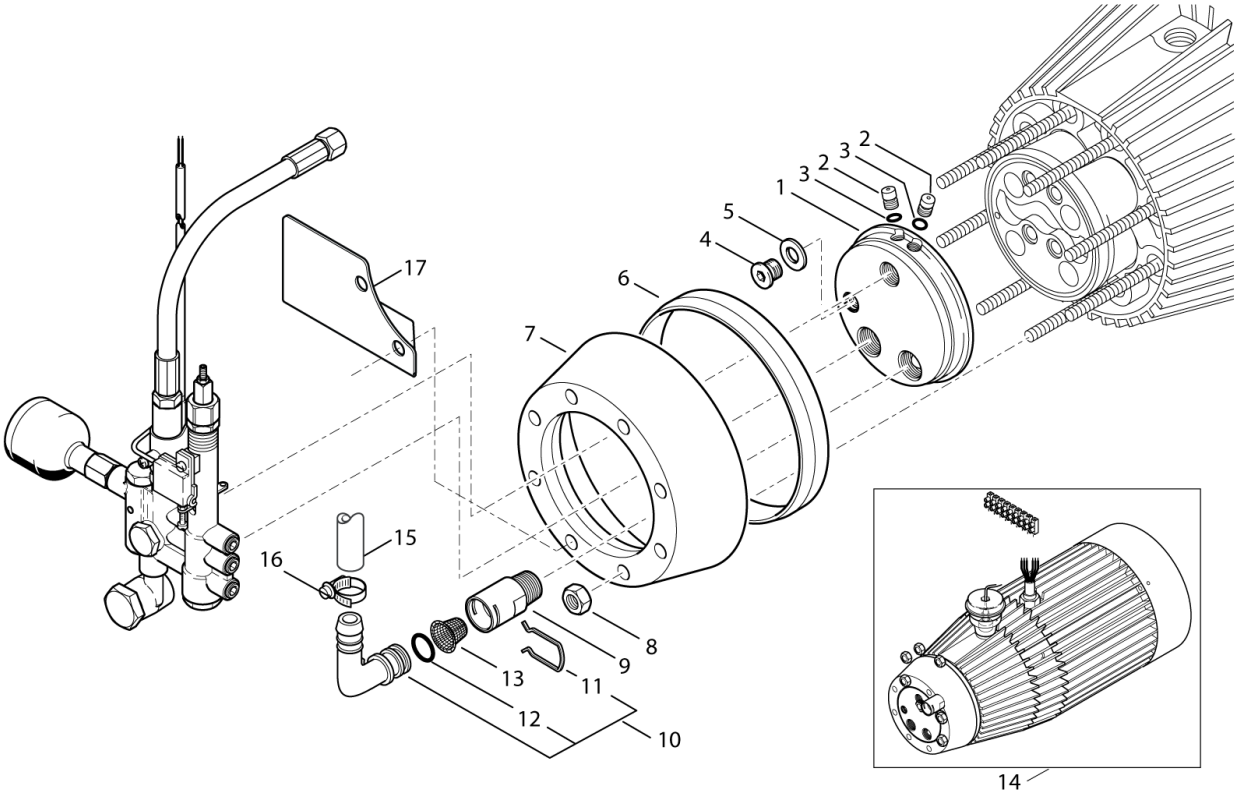

Pos.	Product no	QTY	Description	Notes
01	107121500	1	CONNECTION PLATE	
02	107121501	2	PLUG D8X10.5 CUZN	
03	3000270	2	O-RING 5.1X1.6 NBR 70SH	
04	6180660	1	PLUG G 1/8	
05	3001740	1	O-RING 7.66X1.78 NBR 70SH	
06	6301392	1	RING FOR MOTOR-PUMP	
07	6100602	1	RETAINING RING	
08	1800465	8	NUT M10 DIN 934	
09	107121502	1	INLET SOCKET	
10	1119210	1	INLET ELBOW REP. KIT.	
11	6180661	1	SPRING LOCK FOR BY-PASS VALVE	
12	3004226	1	O-RING 13X3 NBR 70SH	
13	107312039	1	FILTER	
14	107310010	1	MOTOR PUMP UNIT	[1]
14	107310001	1	MOTOR PUMP UNIT SOLAR	[2]
14	107310000	1	MOTOR PUMP UNIT	[3]
14	107310002	1	MOTOR PUMP UNIT SOLAR	[4]
15	106408242	1	HOSE 5/8INCH - 2 METERS	
16	8298	1	HOSE CLIP 16-27	
17	107318139	1	BRACKET FOR C3	

Part Notes:

[1] - for 7-63D
[2] - for 7-51D, 7-51GH and 7-52GH
[3] - for 7-57 and 7-58D, 7-58E, 7-58G
[4] - for 7-37E and 7-38E

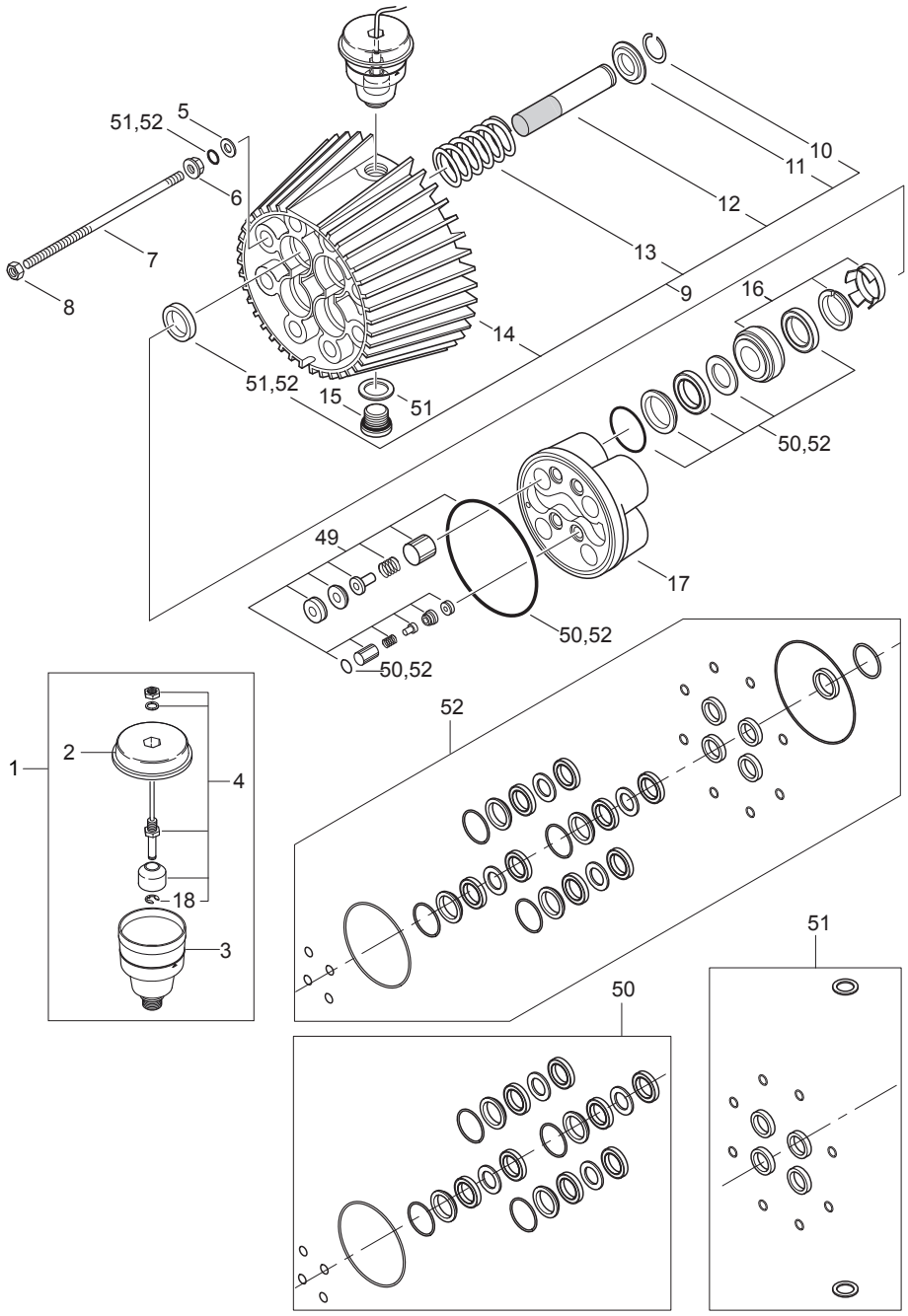
51,52
5
6
7
8
10
11
12
13
9
16
14
51,52
15
51
50,52
49
17
50,52
50,52
52
1
2
4
18
3
51
50

Pos.	Product no	QTY	Description	Notes
	31001229	1	OIL ISO 150 ALPHASYN-T 20L	
0-	5218433	1	PUMP OIL 150 1X1 1L	[1]
1	301000616	1	OIL CONTAINER WITH LEVEL INDICATOR	
2	301000615	1	COVER Ø70X15.5	
3	301000614	1	PUMP OIL CONTAINER Ø66.8X84	
4	301001196	1	FLOAT SWITCH LS01 W/PUR WIRE 10VA	
5	6100718	8	WASHER 10X16X1	
6	6100719	8	THRUST COLLAR	
7	6301368	8	STUDS	
8	1800465	8	NUT M10 DIN 934	
9	6300071	1	CYLINDER BLOCK COMP.	
10	1802529	4	CIRCLIP	
11	6100666	4	RING F. RETURN SPRING	
12	6301166	4	CERAMIC PISTON C3	
13	102602517	4	RETURN SPRING C3 4.3X41X61.5 ST	
14	6100610	1	CYLINDER BLOCK	
15	6150400	1	DRAIN PLUG	
16	101119850	4	KIT THRUSTRING + BACK-UP RING	
17	107120701	1	CYLINDER HEAD	
18	107142593	1	HOLDING WASHER PE	[2]
49	1119195	1	REP.KIT F. VALVE SYSTEM	
50	1119571	1	GASKETS REDUCED REP.KIT	[3]
51	1119820	1	OIL SEAL 03/C3 REP.KIT	
52	1119570	1	GASKETS C3 REP.KIT	[3]

Part Notes:

[1] - 1,1 l - OIL TYPES_QUANTITY for HPW_APRIL 2017

[2] - TSB-PPW-2016-017 Locking ring for oil level switch falling off

[3] - TSB-PPW-2016-011 Rep kit 1119571 and 1119570 potential have wrong O-ring in kit

DE TSB-PPW-2016-011 Rep Kit 1119571 und 1119570 beinhalten möglicherweise einen falschen O-Ring

No Diagram Available

Parts List Only

Pos.	Product no	QTY	Description	Notes
0-	101119742	1	NOZZLE 0530 IND. RING RED	[1]
0-	101119747	1	NOZZLE 0680 INDICATION RING GREY	[2]
0-	107370955	1	ACCESSORY FROST PROTECTION DELUXE	[3]
0-	107370954	1	ACCESSORY FROST PROTECTION STANDARD	[3]
	107370962	1	OPTION STAINLESS STEEL PARTS SOLAR D/EH	

Part Notes:

[1] - 7-38E
[2] - 7-58E
[3] - Frost protection - ANTI FROST

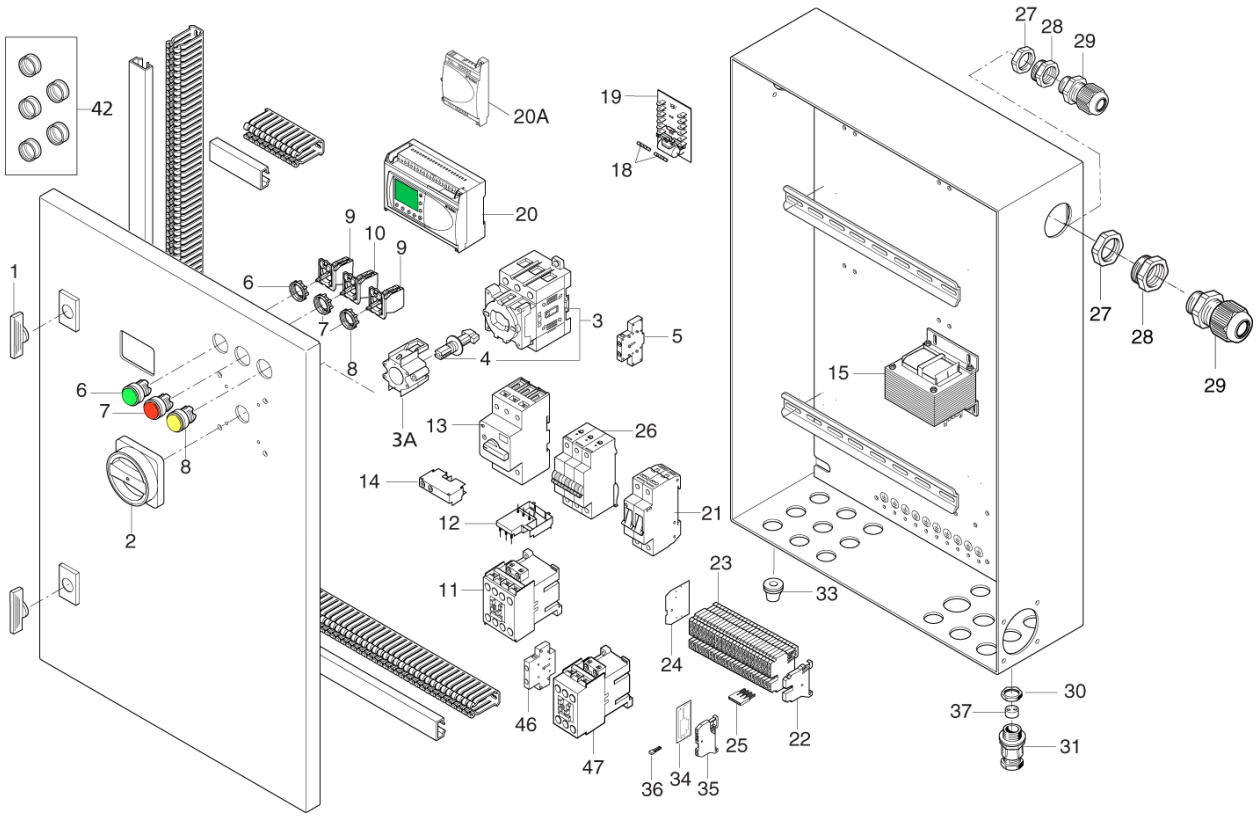
42
20A
19
18
20
9
10
9
6
7
8
3
4
5
1
6
7
8
2
3A
13
26
14
12
21
11
23
24
33
15
27
28
29
27
28
29
30
37
31
46
47
36
34
35
25
22

Pos.	Product no	QTY	Description	Notes
01	103821959	1	KEY	
02	3830121	1	KNOB FOR MAIN SWITCH	
03	103821908	1	MAIN SWITCH 63A	
03A	103821907	3	SHAFT FOR MAIN SWITCH 194L-G2853	
04	103821961	1	AXLE FOR MAIN SWITCH 100A	
05	107318225	1	AUXILIARY CONTACT 194E-A-PD10	
06	103821823	1	GREEN START PUSH BUTTON	
07	103821824	1	RED STOP PUSH BUTTON	
08	103821900	1	SIGNAL LIGHT ATTACHMENT YELLOW	
09	103821825	1	SOCKET INDICATOR + NO CONTACT	
10	103821826	1	SOCKET INDICATOR + NC CONTACT	
11	103822317	1	CONTACTOR CJX2-D32 32A 24V 3P+NO	
11	103822306	1	CONTACTOR CJX2-D18 18A 24V 3P+NO	
12	103821899	1	CONNECTION MODUL 16/23AMP	
13	103821898	1	OVERCURRENT RELAY 10-16A	[1]
13	3817319	1	OVERLOAD CUT-OUT KTA 3-25-16	[2]
14	103823032	1	AUXILIARY CONTACT 140MT-C-AFAR10A01	
15	103821846	1	CONTROL TRANSFORMER 400V 24/19	
18	3812385	1	FUSE D5X20 6.3A VISCOUS US	
19	106420051	1	CIRCUIT BOARD WITHOUT FUSES	
20	106426055	1	PLC M/ALTO-PROGRAM SOLAR E	
20A	103821948	1	EXPANDER AL2-4EYR	
21	103821905	1	SAFETY DEVICE 2 POL 6A	
22	103821922	6	DIN-END STOP WO/SCREW WAGO 249-116	
23	103821920	27	WIRE TERMINAL	
24	103821921	1	END PLATE	
25	103821924	2	JUMPER 4-POL.	
26	107318096	1	SAFETY DEVICE 3P 32A 10KA	
27	103821832	1	NUT M25X1.5 PA/L GREY	[3]
27	103821842	1	T M40X1.5 PA/L.GR	
28	103821874	1	REDUCTION M40/M25	
29	103821831	1	CABLE BUSHING M25x1.5	
29	103821872	1	CABLE BUSHING M40X1.5	[3]
30	103821778	4	NUT M20X1.5	
31	103821785	4	CABLE BUSHING M20X1.5	
33	3803780	9	GROMMET 10-14C	
34	107307392	1	END PLATE 4Q WAGO 2004-1291	
35	107307394	6	WIRE TERMINAL 4Q WAGO 2004-1201	
36	103821969	2	JUMPER	
37	103821942	1	INSERT 2X4	
37	103821946	1	INSERT 3X6.5	
42	107318028	1	PROTECTION COVER 5 PCS.	
46	3821748	1	AUXILIARY SWITCH AB 100-SB10	[2]
47	103822317	1	CONTACTOR CJX2-D32 32A 24V 3P+NO	

Part Notes:

[1] - From week 34 2009
[2] - Up to week 34 2009
[3] - OPTION

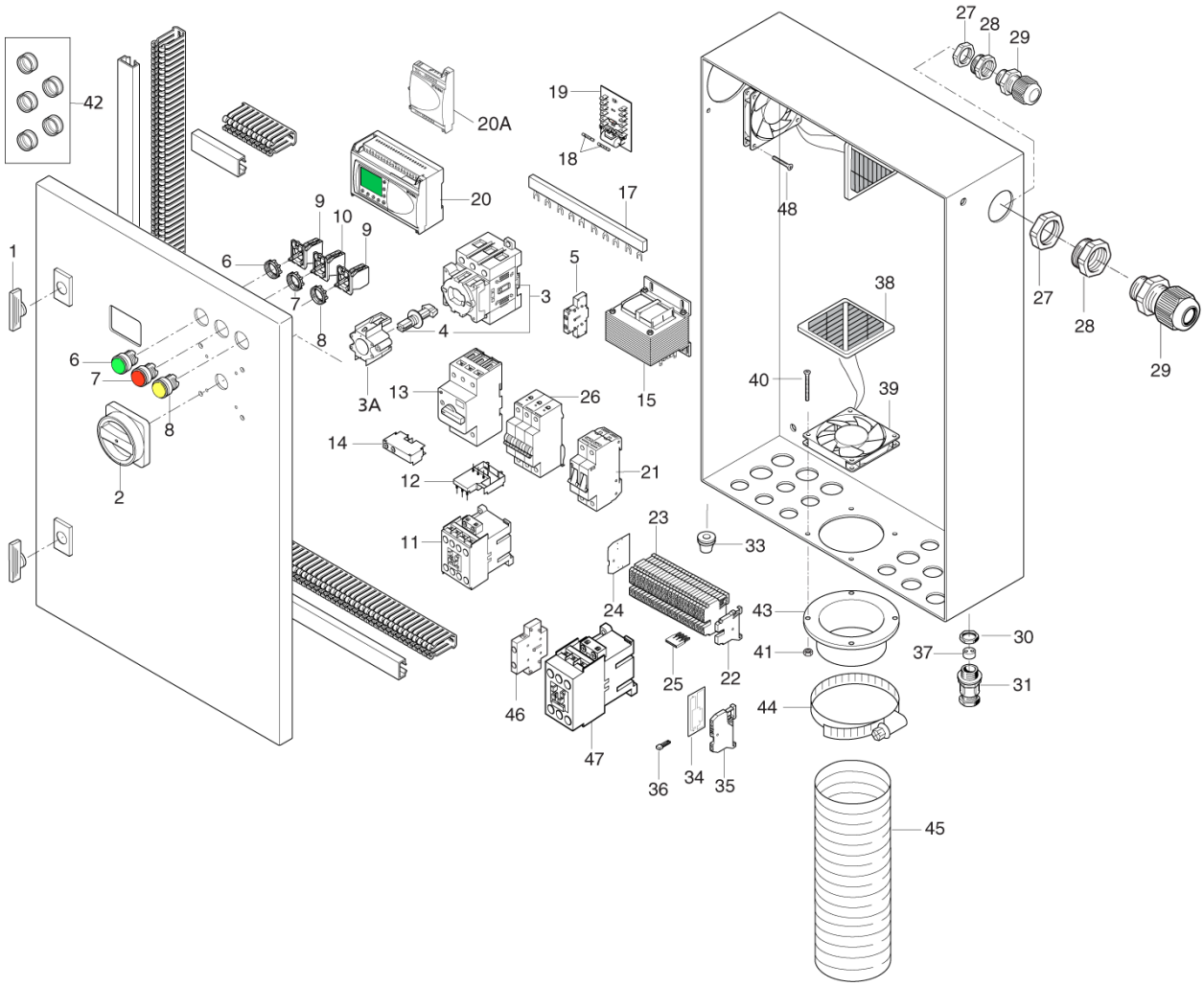
1
2
3
3A
4
5
6
7
8
9
10
11
12
13
14
15
17
18
19
20
20A
21
22
23
24
25
26
27
28
29
30
31
33
34
35
36
37
38
39
40
41
42
43
44
45
46
47
48

Pos.	Product no	QTY	Description	Notes
01	103821959	2	KEY	
02	3830121	1	KNOB FOR MAIN SWITCH	
03	103821895	1	MAIN SWITCH 100A	
03	103821908	1	MAIN SWITCH 63A	
03A	103821907	3	SHAFT FOR MAIN SWITCH 194L-G2853	
04	103821961	1	AXLE FOR MAIN SWITCH 100A	
05	107318225	1	AUXILIARY CONTACT 194E-A-PD10	
06	103821823	1	GREEN START PUSH BUTTON	
07	103821824	1	RED STOP PUSH BUTTON	
08	103821900	1	SIGNAL LIGHT ATTACHMENT YELLOW	
09	103821825	2	SOCKET INDICATOR + NO CONTACT	
10	103821826	1	SOCKET INDICATOR + NC CONTACT	
11	103822317	1	CONTACTOR CJX2-D32 32A 24V 3P+NO	
11	103822306	1	CONTACTOR CJX2-D18 18A 24V 3P+NO	
12	103821899	1	CONNECTION MODUL 16/23AMP	
13	103821898	1	OVERCURRENT RELAY 10-16A	[1]
13	3817319	1	OVERLOAD CUT-OUT KTA 3-25-16	[2]
14	103823032	1	AUXILIARY CONTACT 140MT-C-AFAR10A01	
15	103821847	1	CONTROL TRANSFORMER 230V 24/19	
15	103821846	1	CONTROL TRANSFORMER 400V 24/19	
17	107318106	1	JUMPER RAIL 9-MODULE	[3]
17	107318105	1	JUMPER RAIL 6-MODULE	[4]
18	3812385	2	FUSE D5X20 6.3A VISCOUS US	
19	106420051	1	CIRCUIT BOARD WITHOUT FUSES	
20	106426055	1	PLC M/ALTO-PROGRAM SOLAR E	
20A	103821948	1	EXPANDER AL2-4EYR	
21	103821905	1	SAFETY DEVICE 2 POL 6A	
22	103821922	6	DIN-END STOP WO/SCREW WAGO 249-116	
23	103821920	27	WIRE TERMINAL	
24	103821921	1	END PLATE	
25	103821924	2	JUMPER 4-POL.	
26	107318096	3	SAFETY DEVICE 3P 32A 10KA	[5]
27	103821842	1	T M40X1.5 PA/L.GR	
27	103821832	1	NUT M25X1.5 PA/L GREY	[6]
28	103821874	1	REDUCTION M40/M25	
29	103821872	1	CABLE BUSHING M40X1.5	[6]
29	103821831	1	CABLE BUSHING M25x1.5	
30	103821778	4	NUT M20X1.5	
31	103821785	4	CABLE BUSHING M20X1.5	
33	3803780	9	GROMMET 10-14C	
34	107307392	1	END PLATE 4Q WAGO 2004-1291	
35	107307394	6	WIRE TERMINAL 4Q WAGO 2004-1201	
36	103821969	2	JUMPER	
37	103821942	1	INSERT 2X4	
37	103821946	1	INSERT 3X6.5	
38	107318098	2	FILTER COVER FOR FAN	
39	107318099	2	FAN 80X80X25 24V	
40	107318103	4	SCREW M4X40 DIN965-A	
41	1800127	8	LOCK NUT M4 8.8 A2K DIN 985	
42	107318028	1	PROTECTION COVER 5 PCS.	
43	107318100	1	FLANGE FOR EL-BOX	
44	107318102	1	HOSE CLAMP 71-95MM	
45	107318101	1	FLEXIBLE HOSE D90 L 250MM	
46	3821748	1	AUXILIARY SWITCH AB 100-SB10	[2]
47	103822317	3	CONTACTOR CJX2-D32 32A 24V 3P+NO	[5]
48	107318083	4	SCREW M4X35 DIN965-A 4X	

Part Notes:

[1]	-	From week 34 2009
[2]	-	Up to week 34 2009
[3]	-	54H
[4]	-	36H
[5]	-	2 pcs. 36H, 3 pcs. 54H
[6]	-	OPTION

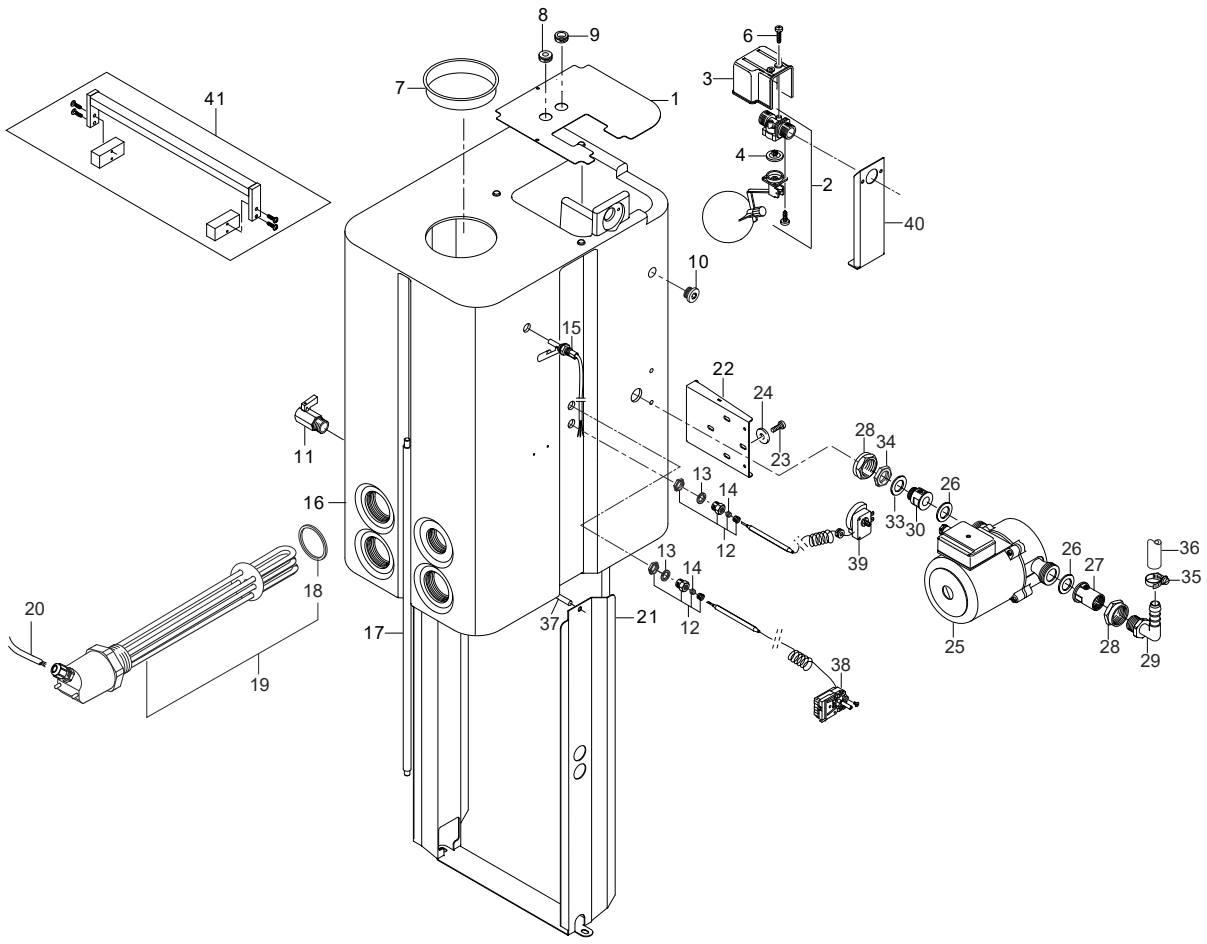
8
9
6
3
7
1
41
4
2
40
10
15
22
24
11
28
34
23
13
14
26
16
33
30
12
39
36
26
27
35
13
14
18
20
37
21
12
17
25
28
29
38
19

Pos.	Product no	QTY	Description	Notes
1	107318114	1	COVER FOR WATERTANK	
2	63871	1	FLOAT VALVE 3/4 DN10 SS MAX 90 DEGR C	
3	34240	1	COVER	
4	17379	1	MEMBRANE A20	
6	16860	2	SCREW 4X12	
7	104601176	1	CONIC DBI-DUT NO. 127C RED	
8	5172	1	RUBBER BUSH	
9	3001427	1	CABLE GLAND	
10	G181419	1	PLUG 24X12	
11	3400819	1	BALOFIX 1/2 CONE	
12	107318000	2	THREADED CONNECTION	
13	1801075	2	PACK.RING D23.8XD14.96 3/8NBR SELF-CENT.	
14	101609437	2	SLEEVE FOR PIPE 8MM 60F	
15	3817582	1	LEVEL SENSOR LS103-12	
16	107318107	1	HEATING TANK	
17	107318108	2	SIDE SUPPORT	
18	107318109	1	O-RING 53.57X3.53 NITRIL 70 SH	[1]
19	107318110	1	HEATING ELEMENT 18KW 230/400V	[1]
19	107318178	1	HEATING ELEMENT 18KW 440V	[1]
20	107318111	1	CABLE FOR HEATING ELEMENT	[1]
21	107318112	1	BRACKET	
22	107318113	1	BRACKET FOR FEED PUMP	
23	1814706	4	SCREW M6X8 A2 ISO 7380	
24	1813807	4	WASHER 6.4/18.0X1.6 A ISO7090 VA	
25	107318067	1	FEED PUMP 1X230 UP20-45 N 150	
26	103821954	2	GASKET	[2]
27	101609354	1	UNION VALVE	
28	101609357	2	UNION NUT	
29	101609353	1	HOSE TAIL ELBOW D16X3/4 INCH PLASTIC	
30	107312000	1	SPACER	
33	2377	1	PACKING RING 27X38X2 IT	
34	1800341	1	LOCK NUT 3/4IN	
35	1810191	2	HOSE CLIP 13-27 A4 SS	
36	106408242	1	HOSE 5/8INCH - 2 METERS	
37	107318097	1	SUPPORT TUBE	
38	101118279	1	THERMOSTAT 0-85 KIT	[3]
39	101118278	1	SAFETY THERMOSTAT 97 DEG 6K KIT	[4]
40	107318173	1	BRACKET FOR WATERTANK EH	[5]
41	101118283	1	BRACKET KIT FOR HEATING TANK	[6]

Part Notes:

[1] - 2 pcs. 36H, 3 pcs. 54H

[2] - GUARANTEE DATE EXPIRED

[3] - MI - Thermostat

TSB-PPW-2017-010 SH SOLAR E, Thermostat Installation Instruction

DE TSB-PPW-2017-010 SH SOLAR E Neue Installationsanweisung Sicherheitsth...

FR TSB-PPW-2017-010 SH SOLAR E Instruction pour thermostat

[4] - TSB-PPW-2017-010 SH SOLAR E, Thermostat Installation Instruction

DE TSB-PPW-2017-010 SH SOLAR E Neue Installationsanweisung Sicherheitsth...

FR TSB-PPW-2017-010 SH SOLAR E Instruction pour thermostat

[5] - TSB-PPW-2011-008 Bracket for Heating Tank

[6] - TSB-PPW-2017-019 SH SOLAR 7P E, Cracks in heating tank

FR TSB-PPW-2017-019 SH Solar 7P E fissure de la chaudière

DE TSB-PPW-2017-019 SH SOLAR 7P E, Risse in Heiztank

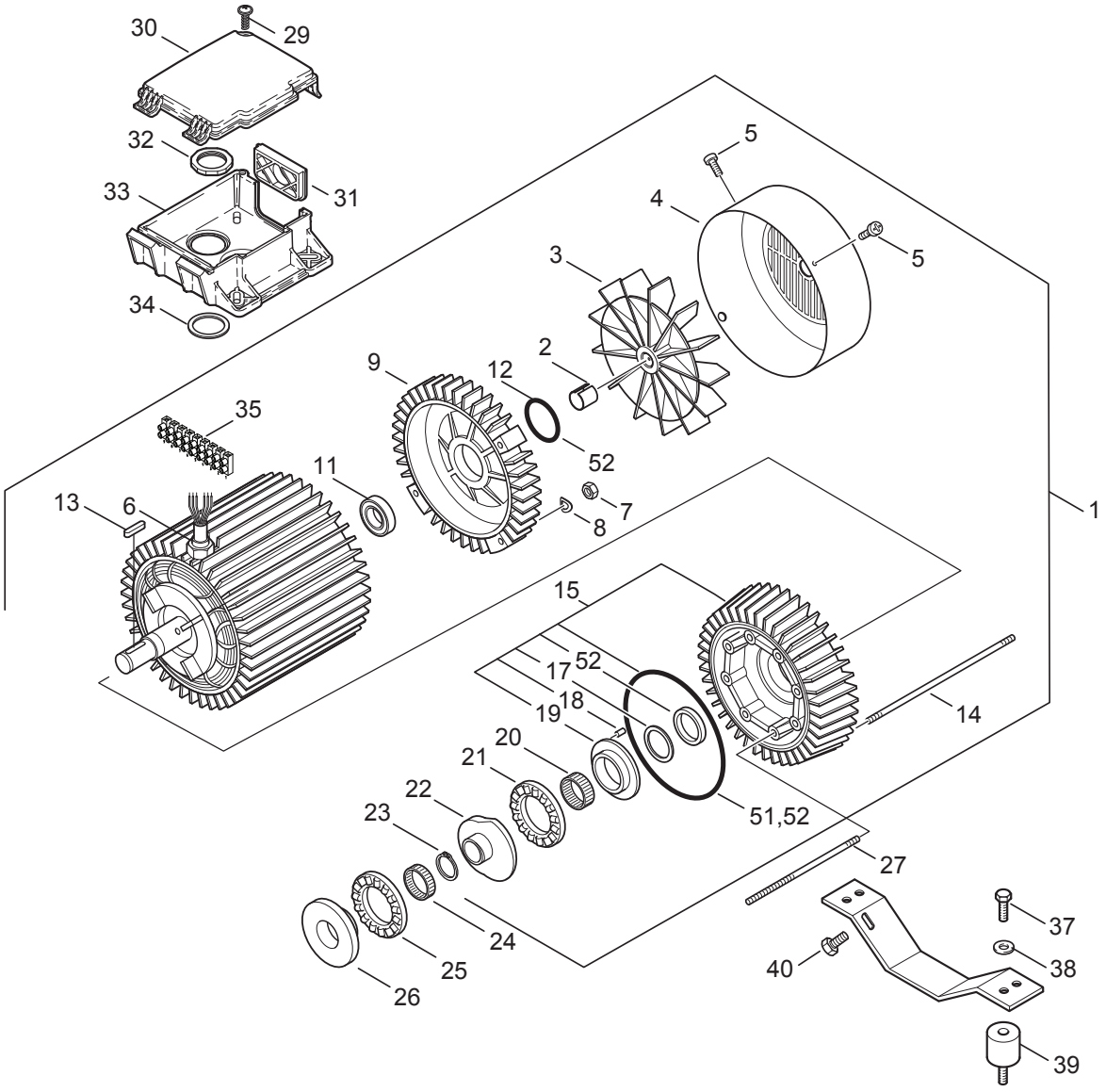
30
29
32
33
31
34
5
4
5
3
2
9
12
52
35
11
13
6
7
8
1
15
17
52
19
18
20
21
22
23
51,52
14
27
24
25
26
37
38
40
39

Pos.	Product no	QTY	Description	Notes
1	107300130	1	MOTOR 6.5KW – 230V/440V/50HZ/3PH	[1]
1	107310070	1	MOTOR 6.5KW 400-415.230/3/50	[2]
1	107310072	1	MOTOR 5.5KW 400-415.230/3/50	[3]
1	107310071	1	MOTOR 5.5KW 400-415.230/3/50	[4]
2	1802503	1	LOCK RING FAN WHEEL	
3	107142275	1	FAN INCL. LOCK RING	[5]
3	6100607	1	FAN	[6]
4	107142276	1	COVER FOR FAN	[5]
4	31001316	1	COVER F. FAN	[7]
5	101814693	4	SCREW M4X 8 EE DIN 7500 A2	
7	2758	4	HEXAGON NUT M8 DIN 934 ZN	
8	1801182	4	SPRING WASHER M8	
9	6100611	1	REAR BEARING COVER	[8]
9	107140617	1	REAR BEARING COVER	[9]
9	107142277	1	REAR BEARING COVER	[5]
11	3200623	1	REAR BEARING 6205	
12	107318244	1	O-RING 51.6X2.4 NBR70	
13	3200672	1	TONGUE 6X6X32 A DIN 6885 ST	
14	6100711	8	STAY BOLT L261MM	
14	6100712	8	STAY BOLT L306MM	[10]
15	6101750	1	FRONT BEARING COVER COMP.	[11]
15	107140615	1	FRONT BEARING COVER COMPLETE	[12]
17	6100995	1	WASHER	
18	6100996	1	GUIDE PIN	
19	107120703	1	BEARING TRACK	
20	3200656	1	NEEDLE BEARING INA K 40X46X17	
21	3200615	1	AXIAL ROLLER BEARING	
22	107120708	1	WOBBLE DISC 4	[13]
22	107120716	1	WOBBLE DISC 12	[14]
22	107120714	1	WOBBLE DISC 10	[15]
22	107120707	1	WOBBLE DISC C3 POLISHED 3 (4,91)	[16]
23	1802511	1	CIRCLIP 28X1.5 DIN471A	
24	3200664	1	NEEDLE BEARING	
25	3200615	1	AXIAL ROLLER BEARING	
26	107120704	1	BEARING TRACK	[17]
27	6301368	8	STUDS	
29	10028	1	SCREW KA50X14 WN1411	
30	301000782	1	COVER ELEC.BOX 128.2X112.	
31	17106	1	INSERT	
32	20862	1	HEXAGON NUT R1 DIN 431 CUZN	
33	301000781	1	ELECTRIC BOX	
34	103004340	1	GASKET 1 INCH	
35	101117839	1	TERMINAL PLUG AND TERMINAL PINS	
37	1803089	4	SCREW INSEX M8X12	
38	1800317	4	WASHER 10.5X22.0X1.25 A ISO7090 ZN	
39	107318091	4	VIBRATION DAMPER M8	
40	1802651	2	SCREW M10X20	
51	1119820	1	OIL SEAL 03/C3 REP.KIT	
52	1119570	1	GASKETS C3 REP.KIT	

Part Notes:

[1] - SH SOLAR 7P-170/1200 E18 440/3/60 EXPT

[2] - 7-58D / 170/1200D

7-58E / 170/1200E

7-58G / 170/1200G7-66D (DISC no. 12)TSB-PPW-2011-013 C3 Pump information

[3] - 7-38E / 135/875E (DISC no. 3)

[4] - 7-52GH / 150/1100GH(DISC no. 10)

[5] - RF – has Nilfisk letter on the motor type plate

[6]	-	EME with 2 holes EME – has EME letter on the motor type plate
[7]	-	EME – has EME letter on the motor type plate
[8]	-	Up to week 32 2009 (ATB) STOCK COVERS GUARANTEE
[9]	-	STOCK COVERS GUARANTEE
		From week 32 2009 EME – has EME letter on the motor type plate
[10]	-	GUARANTEE DATE EXPIRED
[11]	-	Up to week 32 2009 (ATB) - TSB-PPW-2011-013 C3 Pump informationTSB-PPW-2011-013 C3 Pump information
[12]	-	From week 32 2009 RF – has Nilfisk letter on the motor type plateTSB-PPW-2011-013 C3 Pump information
[13]	-	5,5kW 440,220/3/60 TSB-PPW-2019-007 C3 NA6 Wobble Disc and Bearing Track surface hardening change
[14]	-	TSB-PPW-2019-007 C3 NA6 Wobble Disc and Bearing Track surface hardening change
		6,5kW 400,230/3/50
		Machine no. 107370070, 107370077
		Machine no. 107370270, 107370274, 10737276
		Machine no. 107370470
[15]	-	TSB-PPW-2019-007 C3 NA6 Wobble Disc and Bearing Track surface hardening change
		5,5kW-1030 400,230/3/50
		Machine no. 107370495
[16]	-	TSB-PPW-2019-007 C3 NA6 Wobble Disc and Bearing Track surface hardening change
		5,5kW-810 400,230/3/50
		Machine no. 107370260
[17]	-	TSB-PPW-2019-007 C3 NA6 Wobble Disc and Bearing Track surface hardening change

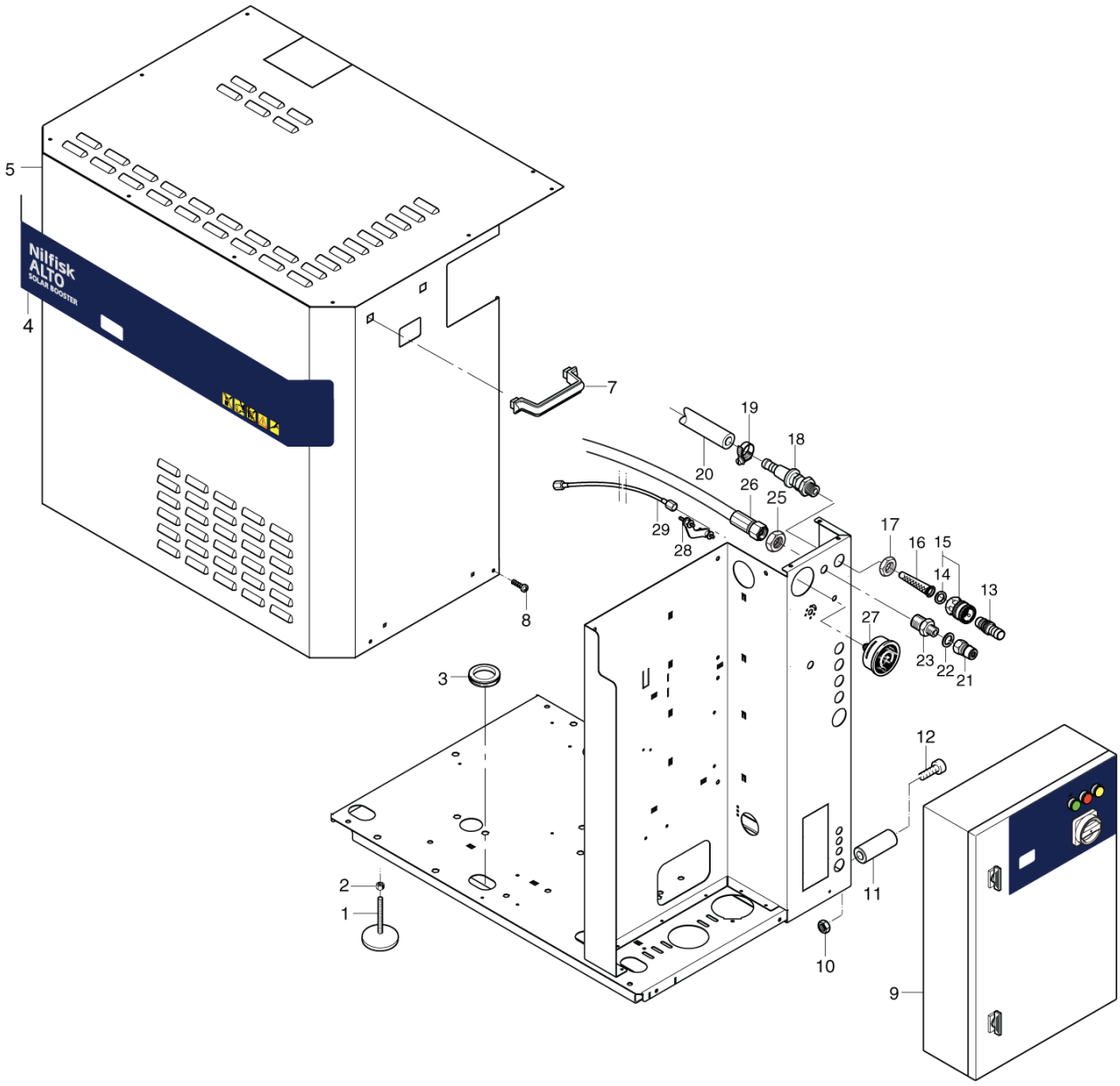
Nilfisk
ALTO
SOLAR BOOSTER
1
2
3
4
5
7
8
9
10
11
12
13
14
15
16
17
18
19
20
21
22
23
25
26
27
28
29

Pos.	Product no	QTY	Description	Notes
01	104601172	4	SUPPORTING BLOCK HX66-12-50	
02	1810068	4	NUT M12	
03	103004331	5	SLEEVE PVC 45/ 60	
04	107319001	1	FRONT LABEL SH SOLAR	
05	107318078	1	CABINET SOLAR D/EH	
07	107318079	1	HANDLE FOR CABINET	
08	107143307	5	SCREW M5X16 A2 ECO-FIX FORM H	
09		1	El-box	[1]
10	1801905	3	NUT M8 ISO 4032 A2-70	
11	107318080	3	SPACER	
12	1812296	3	SCREW M8X25 STAINLESS	
13	1600659	1	LP NIPPLE F. Q.-COUPLING 3/4IN	
14	3001237	1	GASKET Ø24.5XØ16X3 NITRIL 80SH	
15	1602945	1	QUICK COUPLING 3/4 W/GASKET	
16	6100941	1	FILTER L 7CM	
17	1800341	1	LOCK NUT 3/4IN	
18	6100937	1	FILTER HOUSING	
19	1810191	2	HOSE CLIP 13-27 A4 SS	
20	106408242	1	HOSE 5/8INCH - 2 METERS	
21	1603101	1	NIPPLE F/QUICK COULING 3/8 SS	
22	1801075	1	PACK.RING D23.8XD14.96 3/8NBR SELF-CENT.	
23	6200484	1	THREADED CONNECTION	
24	1810076	1	WASHER SERR. INT. M18 GALV A2K DIN6798-J	
25	1803220	1	HEXAGON NUT M18X1.5 ISO 8675 ZN	
26	107318088	1	HIGH PRESSURE HOSE DN8	
27	3600301	1	PRESSURE GAUGE	
28	1808088	1	CLAMP FOR PRESSURE GAUGE	
29	102406647	1	HOSE F. PRESSURE GAUGE 1050MM	

Part Notes:

[1] - El-box
See Electric parts 18H or Electric parts 36H, 54H

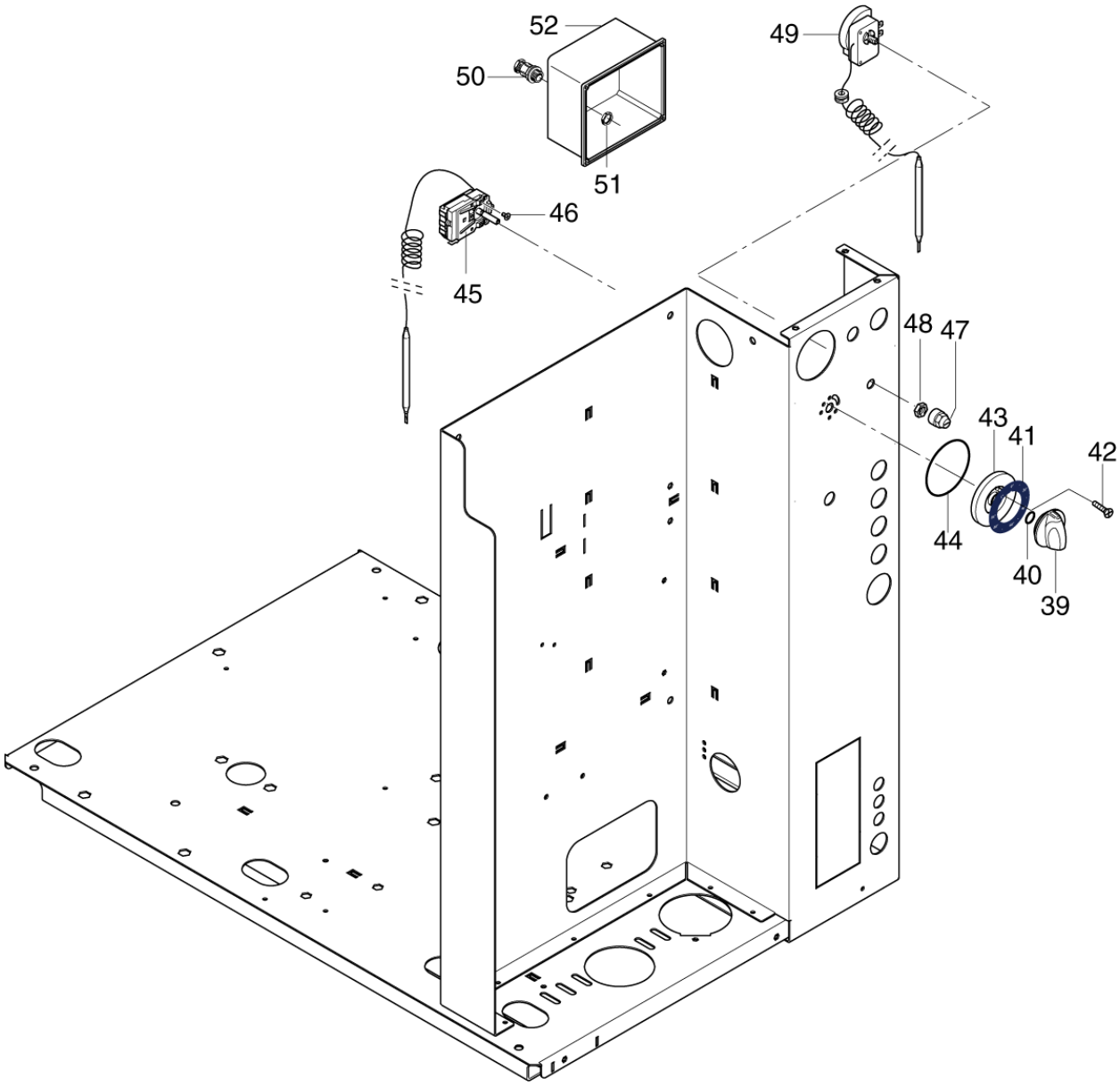
52
50
51
49
46
45
48
47
43
41
42
44
40
39

Pos.	Product no	QTY	Description	Notes
39	909100204	1	ROTARY KNOB 6x5 ALTO BLUE	
40	9868	1	O-RING 10.2X2.5 NBR 70SH	
41	107319071	1	LABEL TEMP. SCALA E18H	
42	1801612	2	COUNTERSUNK SCREW M4X6 ISO 7046 ST/CR	
43	107313045	1	SOCKET COMPL.	
44	3001443	1	O-RING 60X2.62 NBR 70SH	
45	101118279	1	THERMOSTAT 0-85 KIT	[1]
46	1801612	2	COUNTERSUNK SCREW M4X6 ISO 7046 ST/CR	
47	34970	1	CAP	
48	47313	1	NUT M10X1X3	
49	101118278	1	SAFETY THERMOSTAT 97 DEG 6K KIT	[1]
50	103821788	1	CABLE BUSHING M12x1.5 PA	
51	103821789	1	NUT M12X1.5 PA	
52	107318085	1	COVER FOR EL-BOX SOLAR E	

Part Notes:

[1] - MI - Thermostat

TSB-PPW-2017-010 SH SOLAR E, Thermostat Installation Instruction

DE TSB-PPW-2017-010 SH SOLAR E Neue Installationsanweisung Sicherheitsth...

FR TSB-PPW-2017-010 SH SOLAR E Instruction pour thermostat

No Diagram Available

Parts List Only

Pos.	Product no	QTY	Description	Notes
0A	64314	1	REPAIR KIT	[1]
0A	1119570	1	GASKETS C3 REP.KIT	[1]
0A	1119820	1	OIL SEAL 03/C3 REP.KIT	[1]
0A	301000905	1	PISTON D14.6X25.5	[1]
0A	3812385	1	FUSE D5X20 6.3A VISCOUS US	[1]
0A	1119571	1	GASKETS REDUCED REP.KIT	[1]
0A	56519	1	O-RING 6.5X3 NBR 90SH	[1]
0A	301001195	1	REPAIR KIT DISCHARGER VALVE	[1]
0A	1119820	1	OIL SEAL 03/C3 REP.KIT	[1]
0A	1119570	1	GASKETS C3 REP.KIT	[1]
0A	5218433	1	PUMP OIL 150 1X1 1L	[1]
0A	6100941	1	FILTER L 7CM	[1]
0A	1119195	1	REP.KIT F. VALVE SYSTEM	[1]
0A	63056	1	REPAIR KIT DISCHARGER VALVE	[1]
0B	63871	1	FLOAT VALVE 3/4 DN10 SS MAX 90 DEGR C	[2]
0B	107318091	1	VIBRATION DAMPER M8	[2]
0C	107318096	1	SAFETY DEVICE 3P 32A 10KA	[3]
0C	103821847	1	CONTROL TRANSFORMER 230V 24/19	[3]
0C	101406030	1	HIGH PRESSURE HOSE DN8X1000MM	[3]
0C	103823032	1	AUXILIARY CONTACT 140MT-C-AFAR10A01	[3]
0C	107120701	1	CYLINDER HEAD	[3]
0C	3200656	1	NEEDLE BEARING INA K 40X46X17	[3]
0C	103821899	1	CONNECTION MODUL 16/23AMP	[3]
0C	107120714	1	WOBBLE DISC 10	[4]
0C	107120716	1	WOBBLE DISC 12	[4]
0C	103822306	1	CONTACTOR CJX2-D18 18A 24V 3P+NO	[3]
0C	101118279	1	THERMOSTAT 0-85 KIT	[3]
0C	107318088	1	HIGH PRESSURE HOSE DN8	[3]
0C	1802511	1	CIRCLIP 28X1.5 DIN471A	[3]
0C	3600301	1	PRESSURE GAUGE	[3]
0C	301000731	1	MICRO SWITCH 250V	[3]
0C	107120707	1	WOBBLE DISC C3 POLISHED 3 (4,91)	[4]
0C	103822317	1	CONTACTOR CJX2-D32 32A 24V 3P+NO	[3]
0C	6301166	1	CERAMIC PISTON C3	[3]
0C	301002458	1	REED CONTACT 8X75	[3]
0C	107140615	1	FRONT BEARING COVER COMPLETE	[3]
0C	103821898	1	OVERCURRENT RELAY 10-16A	[3]
0C	3200664	1	NEEDLE BEARING	[3]
0C	107310070	1	MOTOR 6.5KW 400-415.230/3/50	[3]
0C	3817582	1	LEVEL SENSOR LS103-12	[3]
0C	103821846	1	CONTROL TRANSFORMER 400V 24/19	[3]
0C	107120704	1	BEARING TRACK	[4]
0C	107120708	1	WOBBLE DISC 4	[4]
0C	106420051	1	CIRCUIT BOARD WITHOUT FUSES	[3]
0C	101118278	1	SAFETY THERMOSTAT 97 DEG 6K KIT	[3]
0C	107310072	1	MOTOR 5.5KW 400-415.230/3/50	[3]
0C	3200615	1	AXIAL ROLLER BEARING	[3]
0C	301000616	1	OIL CONTAINER WITH LEVEL INDICATOR	[3]
0C	107318110	1	HEATING ELEMENT 18KW 230/400V	[3]
0C	107310071	1	MOTOR 5.5KW 400-415.230/3/50	[3]
0C	6101750	1	FRONT BEARING COVER COMP.	[3]
0C	3821748	1	AUXILIARY SWITCH AB 100-SB10	[3]
0C	6100602	1	RETAINING RING	[3]
0C	107146583	1	MONEY SLOTH LOCK 24V-DC SPPT	

Part Notes:

[1] - A
[2] - B
[3] - C

[4]	-	C TSB-PPW-2019-007 C3 NA6 Wobble Disc and Bearing Track surface hardening change

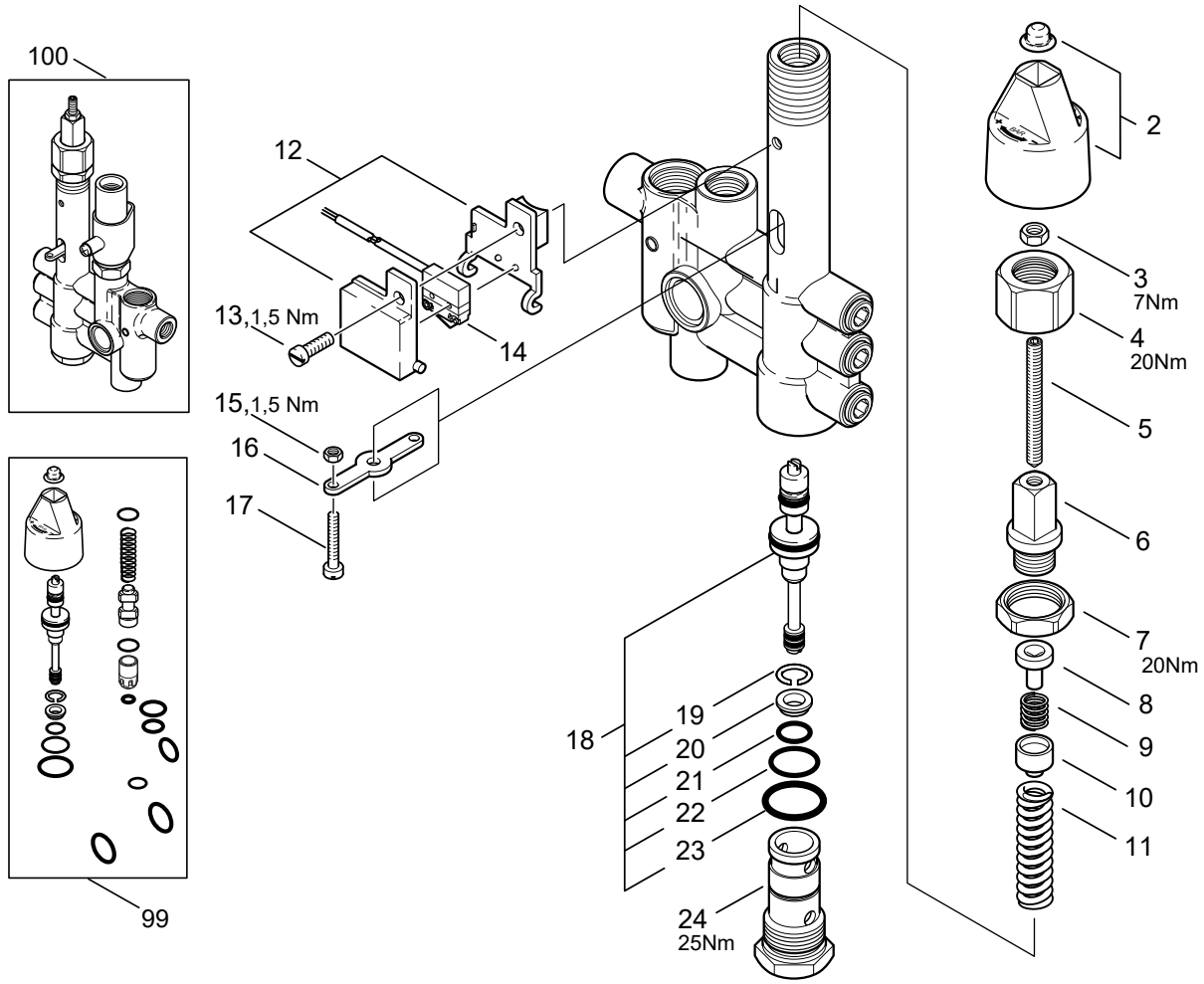
100
99
12
13, 1,5 Nm
14
15, 1,5 Nm
16
17
18
19
20
21
22
23
24
25Nm
2
3
7Nm
4
20Nm
5
6
7
20Nm
8
9
10
11

Pos.	Product no	QTY	Description	Notes
100	301000903	1	DISCHARGER VALVE NEPTUNE	[1]
2	62397	1	ROTARY KNOB	[2]
3	3136	1	HEXAGON NUT M6	[3]
4	62710	1	UNION NUT M24X1.5X21	[3]
5	62711	1	HEADLESS SCREW M6X60 DIN 914 ST/ZN	[3]
6	62712	1	HOLLOW SCREW M16X1X9 4KT SW12X40 ZN	[3]
7	62696	1	HEXAGON NUT M24X1.5X6	[3]
8	62695	1	SPRING SUPPORT	[3]
9	62713	1	SPRING	[3]
10	62694	1	SPRING SUPPORT	[3]
11	40972	1	SPRING 3.5X10.5X54	[3]
12	62401	1	HOUSING FOR MICRO SWITCH	
13	3349	1	SCREW M5X16	
14	301000731	1	MICRO SWITCH 250V	
15	2759	1	HEXAGON NUT M4	
16	62717	1	CONTACT STUD	[3]
17	101117739	1	SCREW HEX M4X22-8.8 A2K DIN912	
18	64314	1	REPAIR KIT	[4]
19	909100001	1	RING Ø14 B DIN 7993	[4]
20	62708	1	VALVE SEAT Ø8.5/Ø11.4/Ø13.9X4	[4]
21	49461	1	O-RING 11X1.5 NBR 70SH	[4]
22	9523	1	O-RING 17X1.5 NBR 70SH	[4]
23	32091	1	O-RING 21X2 NBR 70SH	[4]
24	64301	1	HOLLOW SCREW M24X1.5 Ø20 SW27 ZN	[3]
99	301001195	1	REPAIR KIT DISCHARGER VALVE	

Part Notes:

[1] - 250BAR
[2] - part of pos. 99
[3] - part of pos. 100
[4] - part of pos. 99 and 100

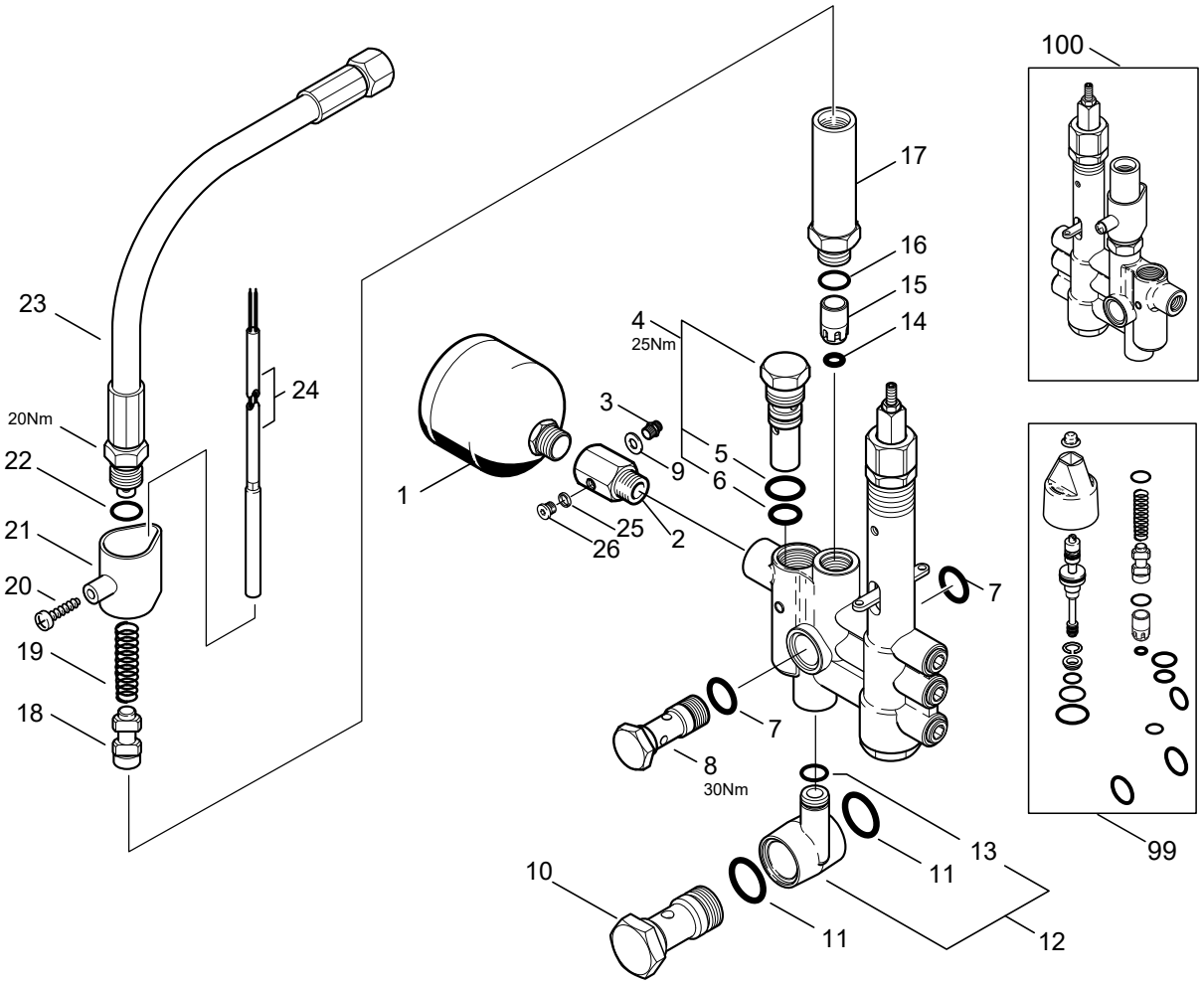
100
17
16
15
14
4
25Nm
3
5
9
6
1
25
2
26
7
7
8
30Nm
13
11
10
11
12
99
23
24
20Nm
22
21
20
19
18

Pos.	Product no	QTY	Description	Notes
100	301000903	1	DISCHARGER VALVE NEPTUNE	[1]
1	63090	1	PRESSURE ACCUMULATOR 250 BAR	
2	107312001	1	SOCKET	
3	1821	1	FITTING XGE 6LR1/8	
4	301000911	1	SAFETY VALVE 250 BAR	
5	16443	1	O-RING 17X2 NBR 70SH	[2]
6	62706	1	O-RING 13X2 NBR 70SH	[2]
7	16443	2	O-RING 17X2 NBR 70SH	[2]
8	62697	1	HOLLOW SCREW M7X36/51 G3/8 SW22 ZN	
9	101814735	1	SEALING WASHER 1/8PP45C	
10	107121503	1	HOLLOW SCREW WATER INLET	
11	24347	2	O-RING 21X2X5 FPM 80SH	[2]
12	63058	1	CONNECTION	
13	13739	1	O-RING 10X2 NBR 70SH	[2]
14	56519	1	O-RING 6.5X3 NBR 90SH	[3]
15	301000905	1	PISTON D14.6X25.5	[3]
16	16998	1	O-RING 14X1.5 NBR 70SH	[3]
17	62722	1	FITTING Ø22X86 M16X1 G3/8 RSB-DX CUZN	[4]
18	63538	1	CONTACT PISTON	[2]
19	6231	1	SPRING 0.5X11X44 VA	[2]
20	10028	1	SCREW KA50X14 WN1411	[5]
21	62399	1	HOLDER FOR FLOW SENSOR	[6]
22	62706	1	O-RING 13X2 NBR 70SH	[2]
23	101406030	1	HIGH PRESSURE HOSE DN8X1000MM	
23	106268111	1	HP HOSE DN10 864 DKL-DKL	[7]
24	301002458	1	REED CONTACT 8X75	
25	101814735	1	SEALING WASHER 1/8PP45C	
26	4443	1	PLUG	
99	301001195	1	REPAIR KIT DISCHARGER VALVE	

Part Notes:

[1] - 250BAR
[2] - part of pos. 99
[3] - part of pos. 99 and 100
[4] - part of pos. 100
[5] - part of pos 100
[6] - part of pos.100
[7] - Before serial nb.: 3520242000567

© 2023 - Nilfisk A/S