PARTS LIST



2026.08.13

NILFISK

TABLE OF CONTENTS

Overview 1
Hose reel 4
Electric box 6
Motor pump 9
101118324 - NA5.2 Pump kit 13
Cylinder block 15
Unloader PA 17
Unloader PA without water regulation 19
Default accessories 21
Recommended spare parts 23

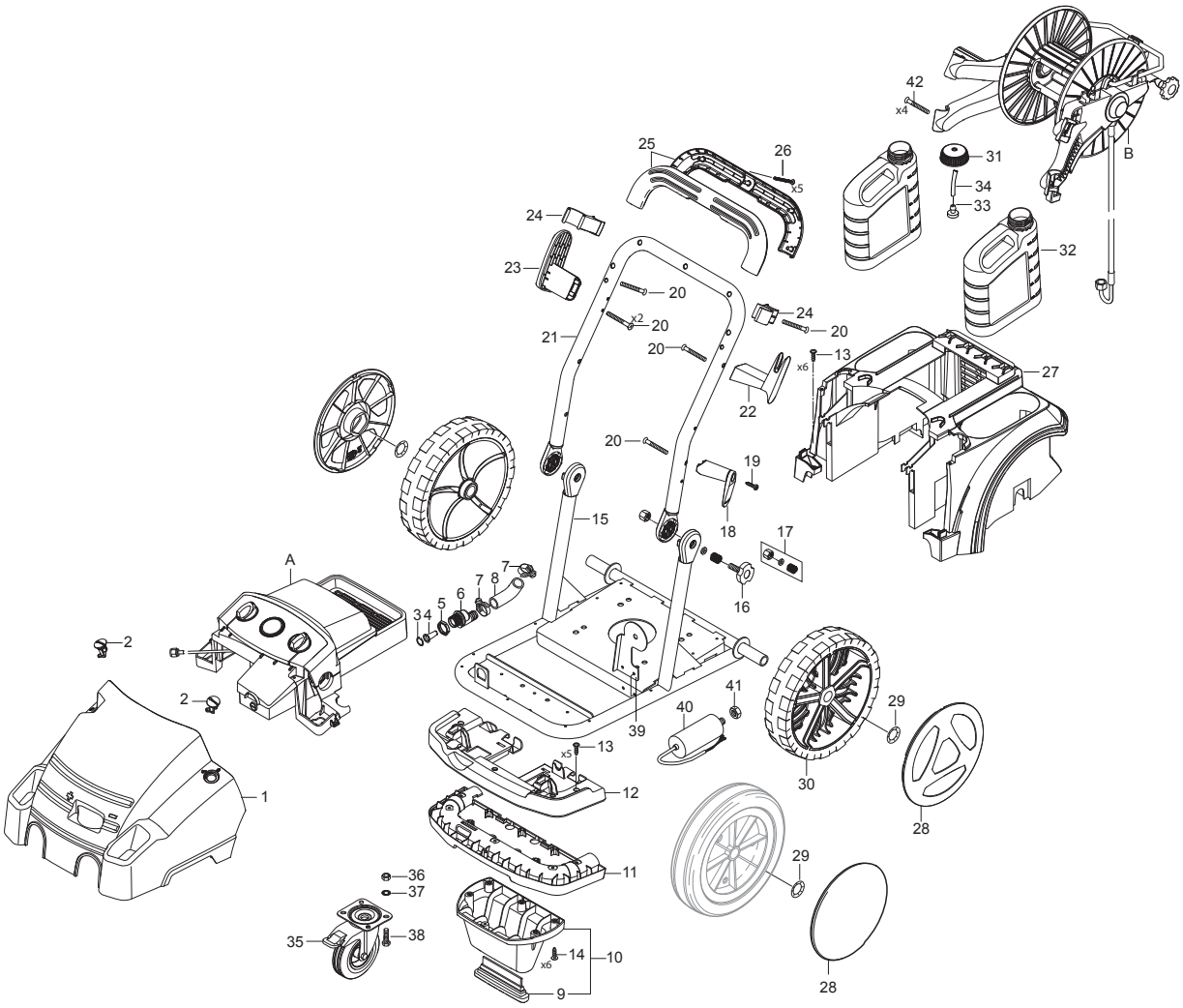
42
x4
B
25
26
x5
31
34
33
32
24
23
20
x2
20
21
20
24
20
13
x6
27
22
20
19
18
15
17
16
A
7
7
8
6
5
34
2
2
39
41
40
29
30
28
13
x5
12
1
11
29
36
37
35
38
14
x6
10
9
28

Pos.	Product no	QTY	Description	Notes
A		1	El-box complete	[1]
B		1	Hose reel complete	[2]
1	107141600	1	CABINET FRONT NILFISK MC 5M	
1	107141601	1	CABINET FRONT NILFISK MC 5M NO REG.	
1	107140958	1	CABINET FRONT NA POSEIDON 5 UNITOR	
2	301001261	2	LOCKING BOLT D29X35	
3	107141667	1	LOCK WASHER	
4	101117926	1	FILTER	
5	1800341	1	LOCK NUT 3/4IN	
6	107141668	1	WATER INLET PIPE NA5/NA6	
7	23221	2	HOSE CLAMP 20-32	
8	107141670	1	RUBBER ELBOW NA5/NA6	[3]
8	107141697	1	RUBBER ELBOW NA5/NA6 FA	[4]
9	107141615	1	RUBBER FOOT	
10	101118100	1	FRONT FOOT FOR POSEIDON KIT	
11	107141617	1	BUMPER BOTTOM	
12	107141618	1	BUMPER TOP	
13	107141690	5	SCREW M5X12 DIN7985 TORX TAPTITE	
14	107141838	6	SCREW K50X18 WN1451 BLACK TORX20	
15	107141620	1	FRAME NA5	
15	107141622	1	FRAME STAINLESS STEEL	
16	107141672	2	GRIB FOR FOLDABLE HANDLE	
17	101118104	2	SPRING AND LOCK NUT KIT	
18	107141625	1	CABLE HOOK MOVABLE BLACK	
19	107141838	1	SCREW K50X18 WN1451 BLACK TORX20	
20	107141627	10	SCREW K50X40 T20	
21	107141623	1	FRAME HANDLE	
22	107141632	1	CABLE HOOK	
23	107141629	1	HOSE HOOK	
24	107141630	1	LANCE HOLDER NA	
25	101118101	1	HANDLE KIT	
26	909100148	5	SCREW K40X30 WN 1452	
27	107141634	1	REAR END	
28	107145780	2	WHEEL CAP FOR WHEEL Ø300X65 - NILFISK	[5]
28	107145782	2	WHEEL CAP FOR WHEEL Ø300X65 - UNITOR	[5]
28	301001077	2	WHEEL CAP D234	[6]
28	107140961	2	WHEEL CAP D300 UNITOR	[5]
29	46363	2	CLAMPING RING D25	
29	107145570	2	CLAMPING RING D25XD42X3	
30	6184074	2	WHEEL 300	[5]
30	107145637	2	WHEEL D300X65	[5]
31	107141664	2	CAP FOR DETERGENT TANK	
32	107141635	1	DETERGENT BOTTLE 2.5 L	
33	6400240	1	CHEMICAL FILTER	
34	106408243	1	HOSE 1/4INCH TRANSPARENT - 5 METERS	
35	107141607	1	WHEEL W. BRAKE D125	
36	1800515	4	LOCK NUT M8 - 8 A2K DIN 985	
37	1800796	4	WASHER M8	
38	2753	4	HEX. SCREW M8X20 ISO 4017 ZN	
39	107141611	1	PLATE FOR CAPACITOR	
40	107141619	1	CAPACITOR 170MF	[7]
40	107141732	1	CAPACITOR 140 UF	[8]
41	2761	1	HEXAGON NUT M12	[9]
42	107141695	4	SCREW K50X35 TORX 20 WN5452 BLACK	
NS	107140982	1	10 PCS OF BOXES FOR PACKAGING	

Part Notes:

[1] - See link Electric box

[2] - See link Hose reel

[3] - PA
[4] - FA
[5] - The new wheel and wheel cap is added from

Variant	Ser. Nr.	order nr.	machine nr.
Nilfisk	3520151900645	- 1712947	- 107146806
Unitor	3520151901159	- 1711044	- 107146807

[6] - STOCK COVERS GUARANTEE

The new wheel and wheel cap is added from

Variant	Ser. Nr.	order nr.	machine nr.
Nilfisk	3520151900645	- 1712947	- 107146806
Unitor	3520151901159	- 1711044	- 107146807

[7] - 230-240/1/50 UK, AU
[8] - US
[9] - STOCK COVERS GUARANTEE

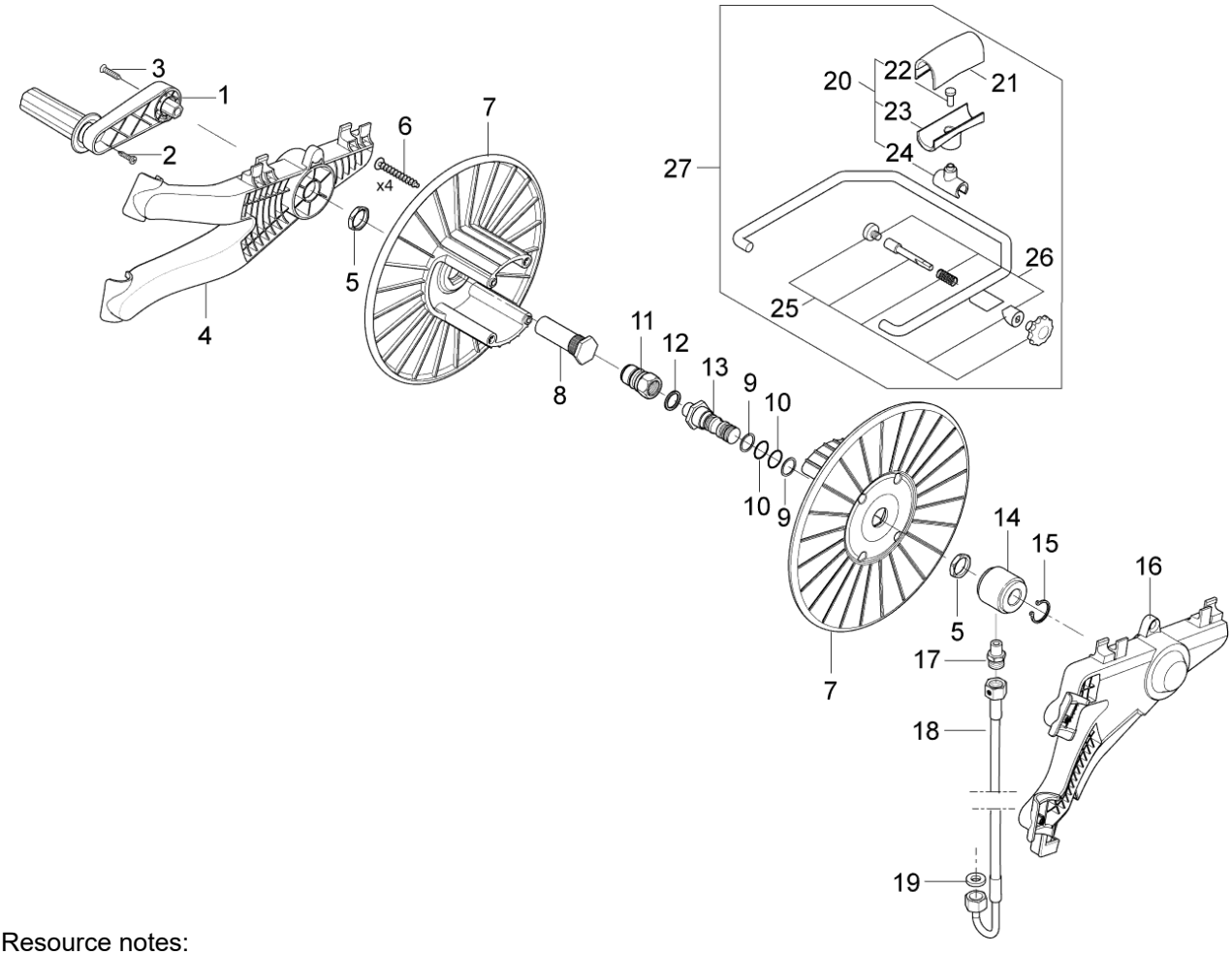

Resource notes:

IS_301001585_MC 5,6,7,8,9_Mounting instructions for hose reel

Pos.	Product no	QTY	Description	Notes
0	106403143	1	HOSE REEL COMPLETE	
1	101118102	1	HOSE REEL HANDLE KIT	
2	107141838	1	SCREW K50X18 WN1451 BLACK TORX20	
3	107141673	1	SCREW M6X45 ISO 7380 BLACK TORX	
4	107141674	1	ADAPTOR RIGHT FOR HOSE REEL	
5	62696	1	HEXAGON NUT M24X1.5X6	
6	909100153	1	SCREW 6X40	
7	301000775	1	HOSE DRUM SECTION	
8	107141675	1	AXLE FOR HOSE REEL	
9	63792	2	SUPPORTING RING 16.26X2.18	
10	19620	2	O-RING 15.54X2.62 NBR 70SH	
11	1600493	1	NIPPEL F. Q-COUPL. 3/8 INCH	
12	1801075	1	PACK.RING D23.8XD14.96 3/8NBR SELF-CENT.	
13	107141676	1	SWIVEL SCREW FOR HOSE REEL	
14	301000977	1	BEARING BUSH	
15	1802057	1	CIRCLIP EXTERNAL 20X1.2 STEEL. DIN 471	
16	107141677	1	ADAPTOR LEFT FOR HOSE REEL	
17	54590	1	FITTING XGE12L 1/4NPT	
18	107141678	1	CONNECTION HOSE FOR HOSE REEL	
19	65466	1	PACKING RING 8X15X1 DIN7603 A CU	
20	101118103	1	HOSE GUIDE PARTS KIT	
21	301000674	1	HOSE GUIDE SECTION - UPPER 70X31.7X28.5	
22	10028	1	SCREW KA50X14 WN1411	
23	301000676	1	HOSE GUIDE SECTION LOWER	
24	107141679	1	HOSE GUIDE SLEEVE OPEN	
25	101118106	1	HOSE GUIDE BRAKE COMPLETE KIT	
26	101118111	1	HOSE GUIDE KIT	
27	101118105	1	HOSE GUIDE COMPLETE	

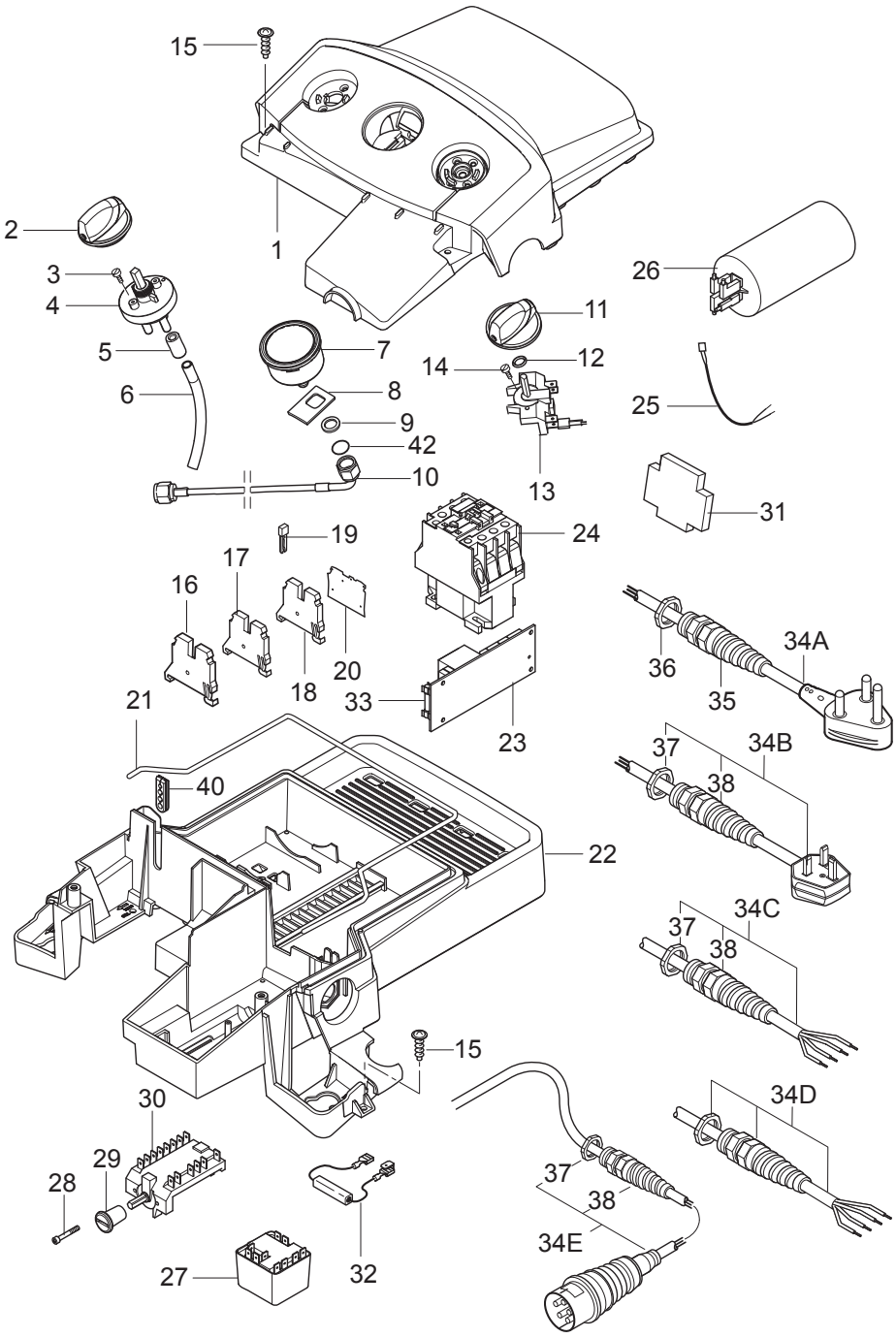
15
1
2
3
4
5
6
7
8
9
42
10
11
12
14
13
26
25
31
24
19
17
16
18
20
33
23
36
34A
35
21
40
22
37
34B
38
34C
37
38
15
30
29
28
27
32
34D
37
38
34E

Pos.	Product no	QTY	Description	Notes
1	107141644	1	E-BOX TOP F. 1-POS SWITCH AND DET. BLACK	[1]
1	107141646	1	E-BOX TOP F. 1-POS SWITCH-NO DET. BLACK	[2]
1	107141645	1	E-BOX TOP F. 2-POS SWITCH AND DET. BLACK	[3]
2	909100214	1	ROTARY KNOB GR.1 4KT. 6X6+8X8 BLUE	
3	1814730	2	SCREW 35X10B W1423	
4	301001000	1	VALVE 51X70	
5	301001906	1	CLOSING CAP D12X21.5	
6	106408243	1	HOSE 1/4INCH TRANSPARENT - 5 METERS	
7	107141648	1	MANOMETER 0-300 BAR	
8	107141650	1	PLATE FOR MANOMETER	
9	107141651	1	WASHER M12 13X24X2.5 A2 DIN125	
10	107141653	1	MANOMETER TUBE FA MODELS	[4]
10	107141652	1	MANOMETER TUBE	[5]
11	909100204	1	ROTARY KNOB 6x5 ALTO BLUE	
12	9868	1	O-RING 10.2X2.5 NBR 70SH	
13	301001058	1	CAM SWITCH 0-1 10A 400VAC	[6]
13	28877	1	SWITCH 10A 400V AC	[7]
14	18274	1	COUNTERSUNK SCREW M4X12	
15	107141838	6	SCREW K50X18 WN1451 BLACK TORX20	
16	103821922	1	DIN-END STOP WO/SCREW WAGO 249-116	
17	107141633	1	TERMINAL BLOCK 4Q PE	[8]
18	107307394	1	WIRE TERMINAL 4Q WAGO 2004-1201	
19	103821969	1	JUMPER	
20	107307392	1	END PLATE 4Q WAGO 2004-1291	
21	101406054	1	SPONGE RUBBER Ø 4 1M	
22	107141654	1	E-BOX BOTTOM DRILLED /CABLE/	
22	107141665	1	E-BOX BOTTOM	
22	107141655	1	E-BOX BOTTOM DRILLED /SWITCH/	[9]
23	107141666	1	PCB POSEIDON 5-6-7	
24	103822314	1	CONTACTOR CJX2-D32 32A 230V 3P+NO	[10]
24	103822303	1	CONTACTOR CJX2-D18 18A 400V 3P+NO	[11]
24	63910	1	CONTACT 100-C23KF10 23	[12]
24	103822304	1	CONTACTOR CJX2-D18 18A 230V 3P+NO	[13]
25	107141796	1	PCB WIRE FOR SUCTION MODE	[14]
25	107141656	1	PCB WIRE FOR B4	
26	101117947	1	CAPACITOR 100UF 450V DOUBLE 6.3 FASTON	[15]
26	107143182	1	CAPACITOR 70UF 450/500V RP-3	[16]
27	107142761	1	START RELAY RVA4G0C	[13]
27	107140968	1	START RELAY RVAH4AH0C	[17]
27+32	101118305	1	START RELAY RVA4G0C KIT	[18]
27+32	101118143	1	START RELAY KIT F. POSEIDON 5-6-7 1PH US	[17]
28	101117739	2	SCREW HEX M4X22-8.8 A2K DIN912	
29	64580	1	ROTARY KNOB	[19]
30	301000293	1	SWITCH START/TRIANGLE 16	
31	64773	1	AUXILIARY CONTACT 100-SBL11	
32	107141730	1	DISCHARGE RESISTOR 15KOHM/7W	[20]
33	301000263	1	FUSE 0.63A/500AT Ø 6.	
34A	301000407	1	POWER CORD SJOW AWG10/3X9.0	[21]
34B	301000912	1	POWER CORD 3G1.5X6M H07RN-F BS1363A GND	[22]
34C	101117811	1	POWER C.H07RN 4G1.5 GDN 6.3X0.8 KIT	[23]
34D	301001384	1	POWER CORD VCT 4X3.5X10,8M W/O PLUG AEH	[24]
34D	301000834	1	POW COR 4G1.5X6M H07RN-F CEE5 16A/6H GND	[25]
35	909100198	1	SCREWED CABLE GLAND M25X1.5	[26]
36	909100020	1	HEXAGON THIN NUT M25X1.5 EN 50262 PA	[26]
37	909100019	1	HEXAGON THIN NUT M20X1.5 EN 50262 PA	[27]
38	909100043	1	CABLE SCREWING W. ANTIBUC. M20X1.5 D13	[27]
40	107141663	1	RUBBER GROMMET	
42	31000508	1	O-RING NBR	

Part Notes:

[1]	-	1 pos. and dertegent
[2]	-	1 pos. without detergent
[3]	-	2 pos. and detergent
[4]	-	FA
[5]	-	PA
[6]	-	1-POS.
[7]	-	2-POS.
[8]	-	ECN-1010232
[9]	-	Star/triangle
[10]	-	(220-240/1/60 US) (200/3/50-60Hz JP)
[11]	-	400/3/50Hz
[12]	-	220/440/3/50/60Hz
[13]	-	230/1/50Hz
[14]	-	S1 to X8 – “suction mode wire”
[15]	-	5-52FA
[16]	-	230/1/50 UK TSB-PPW-2018-003 MH_MC change of start relay and run capacitor
[17]	-	220-240/1/60 US
[18]	-	230/1/50 UK, AUS TSB-PPW-2018-003 MH_MC change of start relay and run capacitor TSB-PPW-2018-003 MH_MC Changement du relais de démarrage et du condensateur de fonctionnement
[19]	-	TSB-PPW-2016-007 Rotary knob for Voltage selector switch 230V-400V must be sealed with lacquer DE TSB-PPW-2016-007 Drehknopf des Spannungsauswahlschalters 230V-400V muss mit Lack versiegelt werden
[20]	-	230/1/50 UK, 220-240/1/60 US
[21]	-	US GUARANTEE DATE EXPIRED
[22]	-	5-32 PA – MC 5M 100/770 PA 230/1/50 UK -M25 - M20
[23]	-	NO, EXP.
[24]	-	JP
[25]	-	EU, 3ph
[26]	-	M25
[27]	-	M20

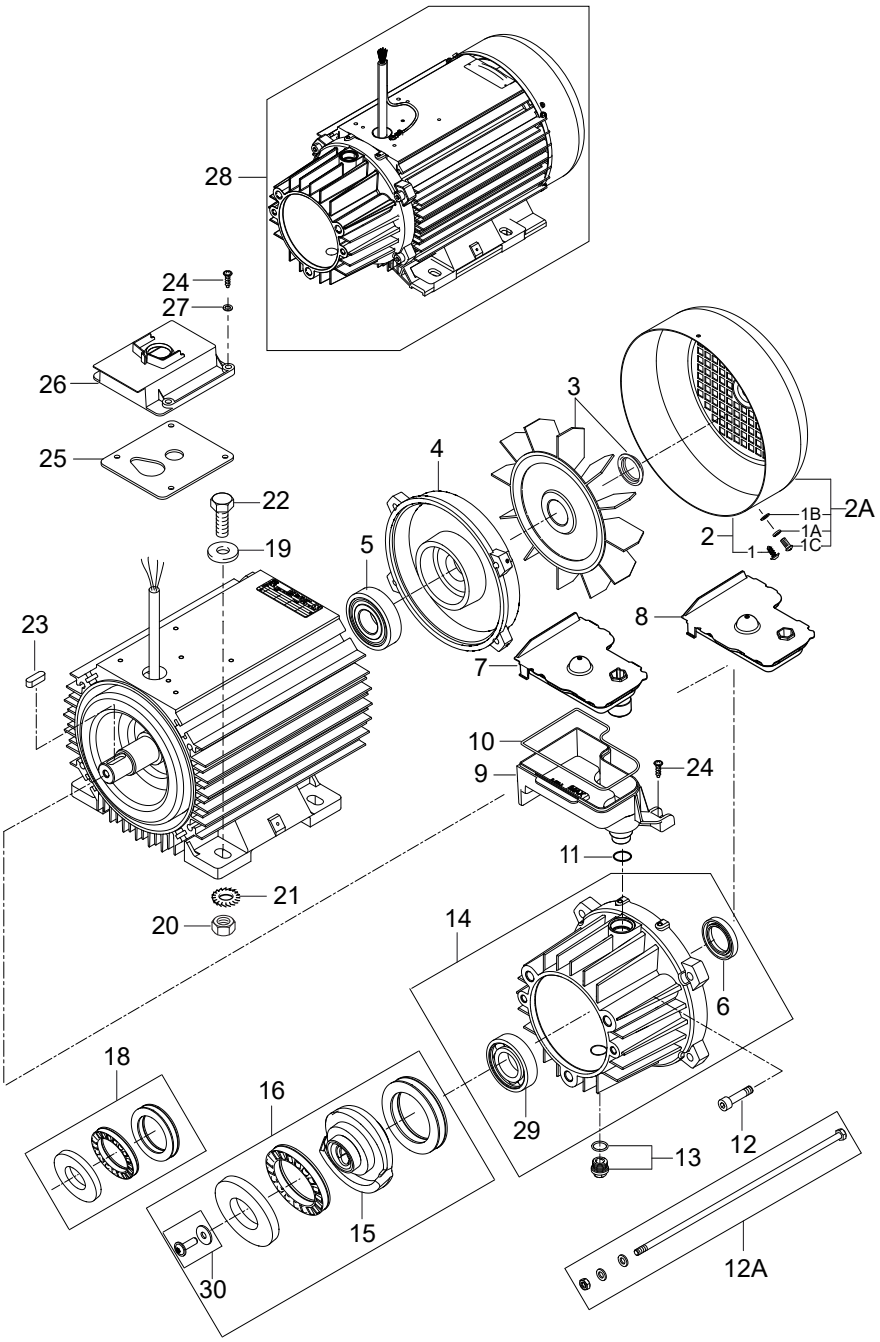
28
24
27
26
25
22
19
5
4
3
2A
1B
1A
1C
2
1
23
8
7
10
9
24
11
21
20
14
6
18
16
29
13
12
15
12A
30

Pos.	Product no	QTY	Description	Notes
	31001229	1	OIL ISO 150 ALPHASYN-T 20L	
0	5218433	1	PUMP OIL 150 1X1 1L	[1]
1		1	SCREW 3X9.5 MUSHROOM HEAD EME	[2]
1A		1	Spring washer Ø5	[3]
1B		1	Flat washer Ø5	[4]
1C	31000488	1	SCREW M5X8 CYLINDER HEAD PH NOTCH RF	[5]
2	107144127	1	FAN COVER - EME	[6]
2A	107144126	1	FAN COVER RF	[5]
3	107144124	1	FAN W/LOCK RING - EME	[2]
3	107144125	1	FAN W LOCK RING RF	[5]
4	31000148	1	REAR BEARING COVER RF	[5]
4	31000150	1	REAR BEARING COVER EME	[2]
5	31000149	1	REAR BEARING 6306 2Z C3 150 DEGREES RF	[5]
5	31000151	1	REAR BEARING EME	[2]
6	G120414	1	OIL SEALING RING Ø30XØ47X7	
7	107140883	1	OIL CONTAINER TOP W/LEVEL SENSOR	
8	107140877	1	OIL CONTAINER TOP	
9	107140879	1	OIL CONTAINER BOTTOM	
10	101406054	1	SPONGE RUBBER Ø 4 1M	
11	3004221	1	O-RING 16X2 NBR 70SH	
12	2751	4	HEX. SCREW M8X35 ISO 4017 ZN	[2]
12A	31000505	1	STAY BOLT M8X290 RF	[7]
12A	31000504	1	STAY BOLT M8X265 RF	[8]
13	107141982	1	OIL PLUG W/O-RING AND MAGNET NA5.2	
14	107141967	1	D-BEARING COVER COMPLETE NA5.2	[9]
15	107141990	1	WOBBLE DISC 7.74 DEG. NA5.2	[10]
15	107141961	1	WOBBLE DISC 8.4 DEG. NA5.2	[11]
15	107141962	1	WOBBLE DISC 8.7 DEG. NA5.2	[12]
15	107141963	1	WOBBLE DISC 9.15 DEG. NA5.2	[13]
15	107141964	1	WOBBLE DISC 10.2 DEG. NA5.2	[14]
15	107141965	1	WOBBLE DISC 10.9 DEG. NA5.2	[15]
15	107141966	1	WOBBLE DISC 12 DEG. NA5.2	[16]
16	101118248	1	WOBBLE DISC 7.74 DEG. BEARING KIT NA5.2	[17]
16	101118246	1	WOBBLE DISC 8.4 DEG. BEARING KIT NA5.2	[11]
16	101118247	1	WOBBLE DISC 8.7 DEG. BEARING KIT NA5.2	[12]
16	101118245	1	WOBBLE DISC 9.15 DEG. BEARING KIT NA5.2	[13]
16	101118243	1	WOBBLE DISC 10.2 DEG. BEARING KIT NA5.2	[18]
16	101118242	1	WOBBLE DISC 10.9 DEG. BEARING KIT NA5.2	[19]
16	101118241	1	WOBBLE DISC 12 DEG. BEARING KIT NA5.2	[20]
18	101118240	1	BEARING KIT FA & PA - NA5.2	
19	2767	7	WASHER 10.5 X 20 X 2	
20	1800465	4	NUT M10 DIN 934	
21	10204	4	SERRATED LOCK WASHER A10	
22	8927	4	HEXAGON HEAD CAP SCREW M10X 35 ISO 4017	
23	19639	1	PARALLEL KEY 8X7X25 A DIN 6885 ST	
24	107140881	2	SCREW M5X12 DIN 7985 TORX	
25	107140875	1	SEALING BETWEEN E-BOX AND MPU	[21]
26	107140876	1	COVER FOR E-BOX ON MOTOR	
27	2767	4	WASHER 10.5 X 20 X 2	
28	107141953	1	MOTOR 6.7KW 220-440 230-400 3 50/60HZ EU	[22]
28	107141954	1	MOTOR 5.5 KW 220/230-400/440/3/50/60 EU	[23]
28	107141955	1	MOTOR 5.2 KW/220/1 60HZ 5-52 US	[24]
28	107141956	1	MOTOR 2.2 KW/230/1 50HZ	[25]
28	107141957	1	MOTOR 4KW 200/3/50-60HZ JP 5-47 JP	[26]
28	107141958	1	MOTOR 4KW 230-400/220-440 3/50-60HZ NA5	[27]
29	107144817	1	BEARING KBC 6206 GB/T818	
30	107142658	1	NA5.2 WD SCREW AND WASHER	
	101118263	1	MPU NA5.2 PA 5.5KW/400V/50HZ/3PH/10.9DEG	[28]

Part Notes:

[1]	-	0,71L - OIL TYPES_QUANTITY for HPW_APRIL 2017
[2]	-	- EME – has EME letter on the motor type plate
[3]	-	RF – has Nilfisk letter on the motor type plate Ø5 spring washer
[4]	-	RF – has Nilfisk letter on the motor type plate Ø5 flat washer
[5]	-	RF – has Nilfisk letter on the motor type plate
[6]	-	GUARANTEE DATE EXPIRED - EME – has EME letter on the motor type plate
[7]	-	RF – has Nilfisk letter on the motor type plateRF incl nut and washer, 5-62 PA - MC 5M 220/1130 PA 5-62 FA - MC 5M 220/1130 FA
[8]	-	RF – has Nilfisk letter on the motor type plateRF incl nut and washer, 5-32 PA – MC 5M 100/770 PA 5-41 PA – MC 5M 180/840 PA 5-47 PA – MC 5M 170/980 PA 5-53 PA - MC 5M 200/1000 PA 5-56 PA - MC 5M 200/1050 PA 5-56 FA - MC 5M 200/1050 FA
[9]	-	with 2 pins D4x8 - See instruction107141734A_mounting D-bearing cover NA5 TSB-PPW-2015-002 NA5.2 Pump Information
[10]	-	5-32 PA –Machine no. 107146700, 107146701 MC 5M 100/770 5-30 PA 240/1/50- 5-41 PA , 220/440/3/60
[11]	-	5-47 PA – Machine no. 107146703 MC 5M 170/980 PA, 200/3/60 JP
[12]	-	5-41 PA – Machine no. 107146705 MC 5M 180/840 PA, 400/3/50
[13]	-	5-56 PA - Machine no. 107146713MC 5M 200/1050 PA, 60Hz
[14]	-	5-52 FA, 5-47 PA – Machine no. 107146702 MC 5M 170/980 PA 200/3/50 JP, 107146719 MC 5M-220/1130 exp., 107146724 MC 5M-2300/4.8 US
[15]	-	5-53 PA - Machine no. 107146727, 107146728 MC 5M 200/1000 5-56 PAFA - Machine no. 107146710, 107146711, 107146714, 107146715, 107146716, 107146743 MC 5M 200/1050
[16]	-	5-62 FA - Machine no. 107146718, 107146721, 107146722 MC 5M 220/1130 FA,400/3/50
[17]	-	5-32 PA – Machine no. 107146700, 107146701 MC 5M 100/770 5-30 PA 240/1/50- 5-41 PA , 220/440/3/60
[18]	-	5-52 FA, 5-47 PA – Machine no. 107146702 MC 5M 170/980 PA 200/3/50 JP, 107146719 MC 5M-220/1130 exp., 107146724 MC 5M-2300/4.8 US
[19]	-	5-53 PA - Machine no. 107146727, 107146728 MC 5M 200/1000 5-56 PAFA - Machine no. 107146710, 107146711, 107146714, 107146715, 107146716, 107146743 MC 5M 200/1050
[20]	-	5-62 FA - Machine no. 107146718, 107146721, 107146722 MC 5M 220/1130 FA,400/3/50

[21]	-	TSB-PPW-2018-012 NA5_NA6 mpu. Water enters into the stator.
[22]	-	5-62 PA - MC 5M 220/1130 PA 5-62 FA - MC 5M 220/1130 FA Also order Gasket for motor, 107140875
[23]	-	5-53 PA - MC 5M 200/1000 PA 5-56 PA - MC 5M 200/1050 PA 5-56 FA - MC 5M 200/1050 FA Also order Gasket for motor, 107140875
[24]	-	5-52 US Also order Gasket for motor, 107140875
[25]	-	5-32 PA – MC 5M 100/770 PA UK Also order Gasket for motor, 107140875
[26]	-	5-47 PA – MC 5M 170/980 PA JP Also order Gasket for motor, 107140875
[27]	-	5-41 PA – MC 5M 180/840 PA Also order Gasket for motor, 107140875
[28]	-	MC 5M-200/1050 XT 400/3/50 EU

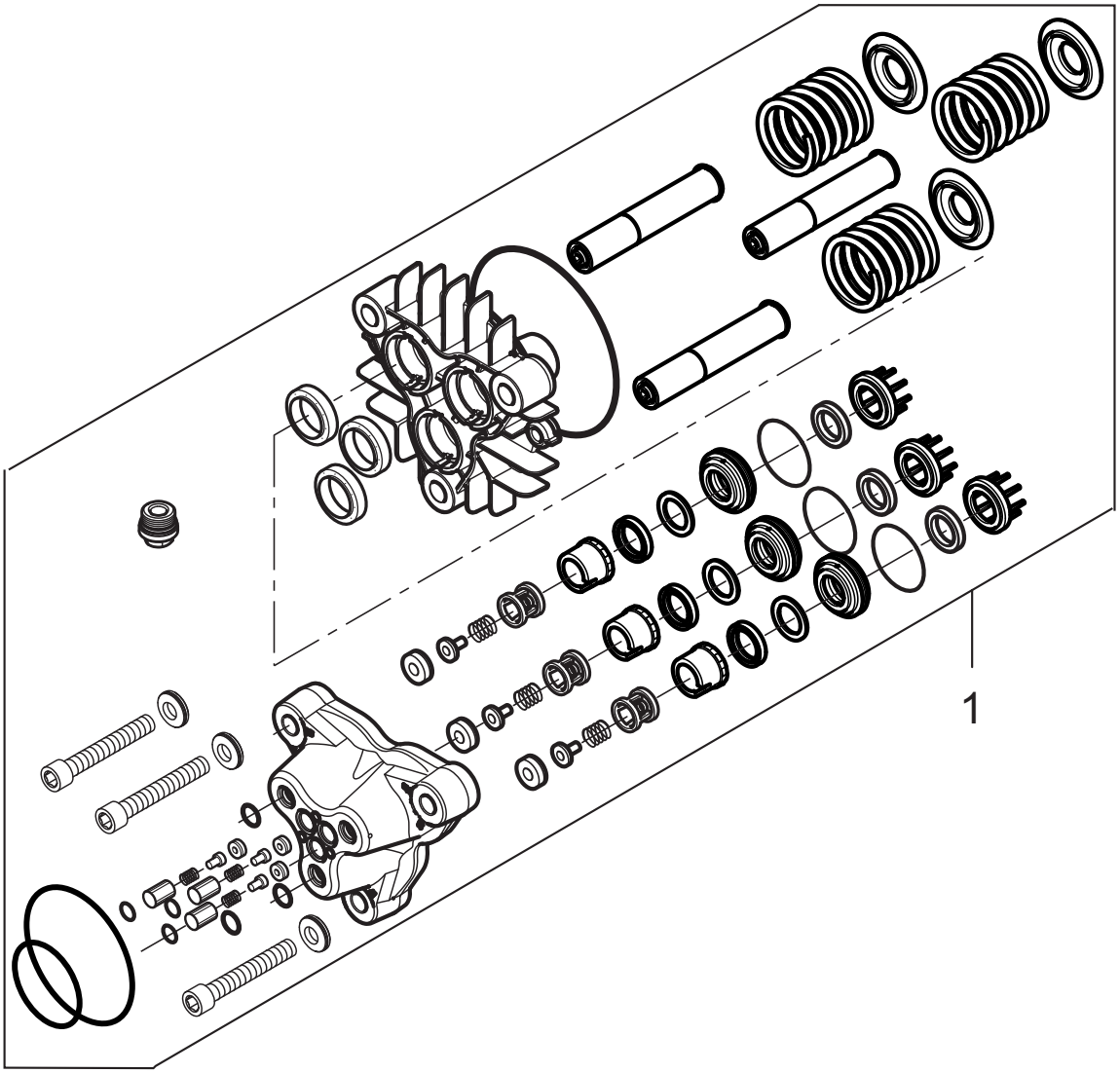
1

Pos.	Product no	QTY	Description	Notes
1	101118324	1	PUMP KIT NA5.2	[1]

Part Notes:

[1] - TSB-PPW-2020-003 NA5 pump THRUST COLLAR changed

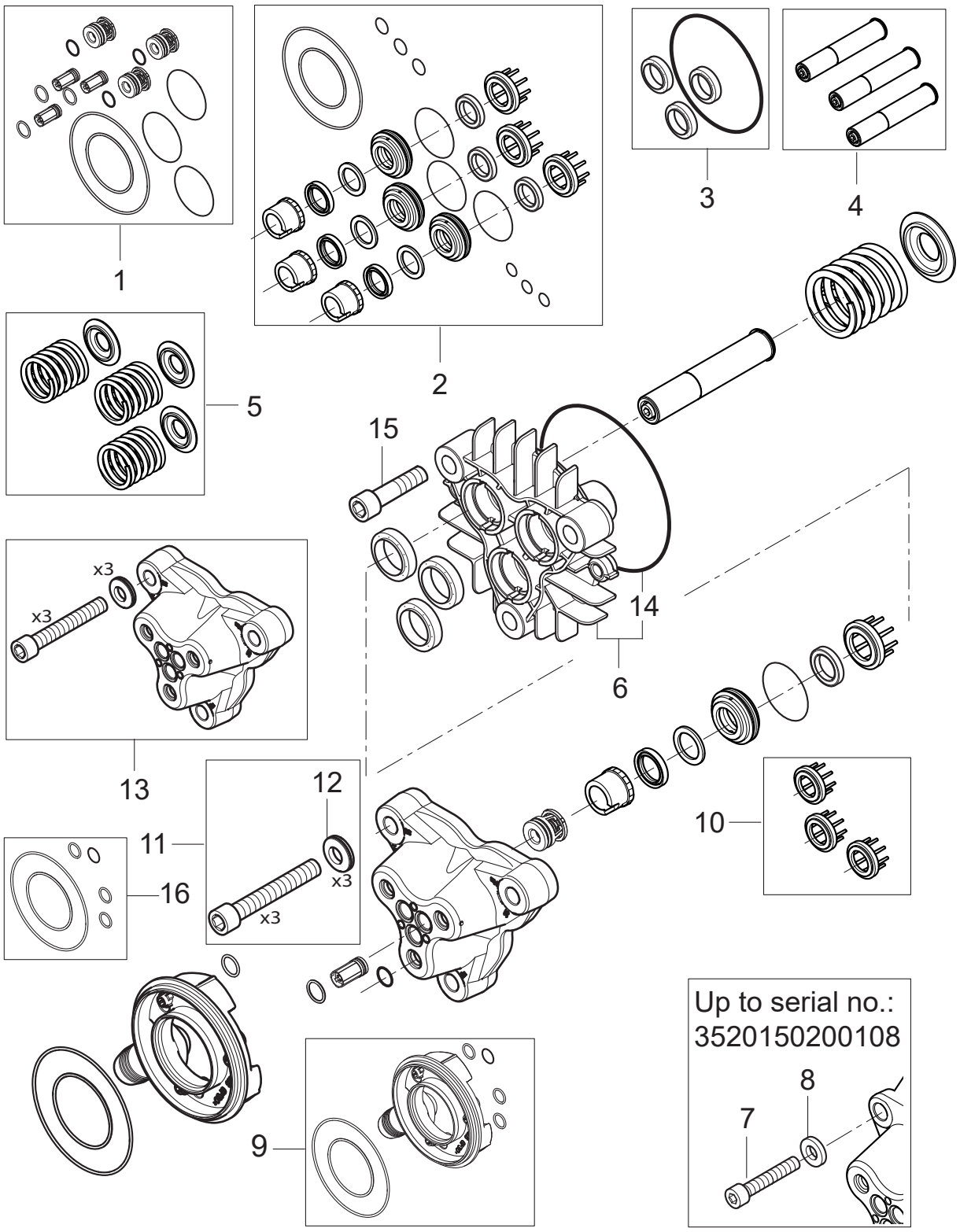
1
2
3
4
5
15
14
6
x3
x3
13
12
11
x3
x3
16
10
9
Up to serial no.:
3520150200108
8
7

Pos.	Product no	QTY	Description	Notes
1	101118121	1	VALVE KIT - NA5	
2	101118323	1	WATER SEAL KIT NA5	[1]
2	101118256	1	WATER SEAL NA5 HEAVY DUTY HOTSUCTION KIT	[2]
3	107144102	1	OIL SEAL KIT - NA5	
4	101118239	1	PISTON KIT - NA5.2	
5	107144104	1	SPRING KIT - NA5	
6	107141983	1	CYLINDER BLOCK W/ O-RING NA5.2	[3]
7	107141513	3	CYLINDRICAL SCREW M12X65 12.9 DELTASIL	[3]
8	107141727	3	WASHER 20X13X2 ISO7092 ZINC PLATED	[3]
9	101118078	1	WATER INLET KIT FOR NA5	
10	107140919	1	SUPPORT RING NA5 SPARE VPE 3	
11	107141968	1	CYL.SCREW M12X80 WITH NORDLOCK WASHER	[3]
12	107141969	3	WASHER NLX12SP D12.5XD25.4X4.2MM	[3]
13	107141985	1	CYLINDER HEAD NA5.2 W. SCREWS & WASHERS	[3]
14	107141512	1	O-RING D114 X D1.78 NBR 72	
15	4042	2	CYLINDER SCREW M8X40 ISO 4762 8.8 ZN	
16	101118080	1	SEAL KIT FOR WATER INLET FOR NA5 FA PA	

Part Notes:

[1] - TSB-PPW-2020-003 NA5 pump THRUST COLLAR changed

DE TSB-PPW-2020-003 NA5 Pumpe - Änderung der Druckringe

TSB-PPW-2020-003 Nouvelles bagues laiton pour pompe NA5

[2] - Heavy duty water seal kit. Inlet temperature can be increased from 60°C (140°F) to 80°C (176°F).

TSB-PPW-2018-001 NA5.2 Pump Heavy Duty Kit hot water

DE TSB-PPW-2018-001 NA5.2 Pumpe Heißwasser Kit

TSB-PPW-2018-001 Kit de joints renforcés pour pompe NA5_2

[3] - TSB-PPW-2015-002 NA5.2 Pump Information

TSB-PPW-2012-007 Washer for cylinder block NA5

DE TSB-PPW-2012-007 Unterlagscheibe Zylinderkopf

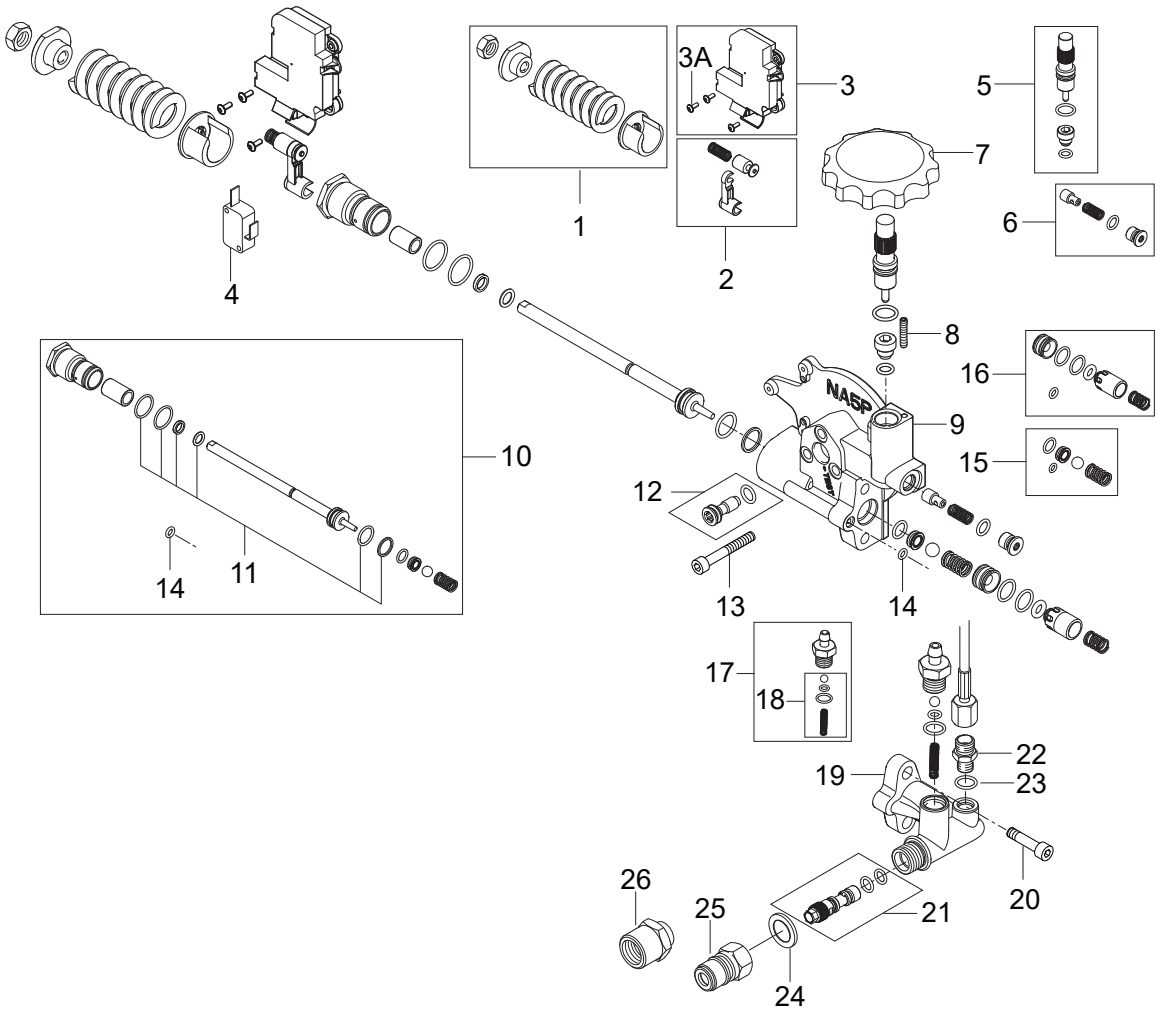
1
2
3
3A
4
5
6
7
8
9
10
11
12
13
14
15
16
17
18
19
20
21
22
23
24
25
26
NASP

Pos.	Product no	QTY	Description	Notes
1	101118091	1	UNLOADER SPRING REP. KIT-PAINTED NA5 PA	[1]
1	101118092	1	UNLOADER SPR. REP.KIT-NON PAINTED NA5 PA	[2]
2	101118090	1	MICROSW. ACTIVATION REP. KIT NA5 PA	
3	101118084	1	MICROSWITCH BOX W/O MICROSW. NA5 PA	
3A	107141515	3	SCREW M3X8 ISO7380 FZG TORX 10	
4	301002754	1	MICRO-SWITCH 250V/20AAC NC FS 6.3	
4A	107143308	1	CABLE FOR MICRO SWITCH MC5	
5	101118313	1	FLOW REGULATION VALVE KIT	[3]
6	101118314	1	PRESSURE BUILD UP VALVE HIGH FLOW KIT	[3]
7	107140823	1	REGULATOR KNOB NA5/NA6	
8	106408188	1	SCREW M4X20 POINTED DIN 913	
9	107140884	1	UNLOADER PA NA5	[3]
10	101118294	1	STEM + SEALING REP. KIT NA5/5.2/6/6+ PA	[4]
11	101118083	1	SEAL KIT FOR STEM FOR NA5 PA	
12	107144137	1	UNLOADER PLUG NA5	
13	5100	3	SCREW M6X45 ISO 4762	
14	107141514	1	O-RING D4 X D1.5 NBR 90	
15	101118295	1	BYPASS VALVE REP. KIT NA5.2 PA	[5]
16	101118254	1	HOLDING PRESSURE VALVE REP. KIT NA5.2 PA	[6]
17	1119406	1	NON RETURN VALVE REP. KIT	
18	101118089	1	NON RETURN VALVE REP. KIT NA5 PA	
19	107141516	1	OUTLET FITTING NA5 PA	
20	8894	2	SCREW DIN 912 M8 X 20 8.8 FZB	
21	107144112	1	VENTURI TUBE D2.03 NATURE	
22	1821	1	FITTING XGE 6LR1/8	
23	101814735	1	SEALING WASHER 1/8PP45C	
24	1801075	1	PACK.RING D23.8XD14.96 3/8NBR SELF-CENT.	
25	1600493	1	NIPPEL F. Q-COUPL. 3/8 INCH	
25	1603101	1	NIPPLE F/QUICK COULING 3/8 SS	[7]
26	64235	1	CONVERTER KEW/WAP	

Part Notes:

[1] - 5-47 PA – MC 5M 170/980 PA

5-56 PA - MC 5M 200/1050 PA

5-56 FA - MC 5M 200/1050 FA

5-62 PA - MC 5M 220/1130 PA

5-62 FA - MC 5M 220/1130 FA(5-41 PA – MC 5M 180/840 PA)

[2] - 5-30,

5-32 PA – MC 5M 100/770 PA

[3] - TSB-PPW-2020-001 MH 4_MH 5M Damper Valve removed

DE TSB-PPW-2020-001 MH 4 MH 5M Dämpferkolben entfernt

TSB-PPW-2020-001 MH 4M5M_ MC 5M machine en version PA. Supression de l'anti bélier

[4] - TSB-PPW-2017-005 Low pressure—Unloader valve for NA5.2 pump can leak internally

DE TSB-PPW-2017-005 Niederdruck-Unloader Ventil für die NA5.2 Pumpe kann...

[5] - TSB-PPW-2017-005 Low pressure—Unloader valve for NA5.2 pump can leak internally

[6] - 5-32, UK and 5-30, AU
TSB-PPW-2017-005 Low pressure—Unloader valve for NA5.2 pump can leak internally

[7] - INOX

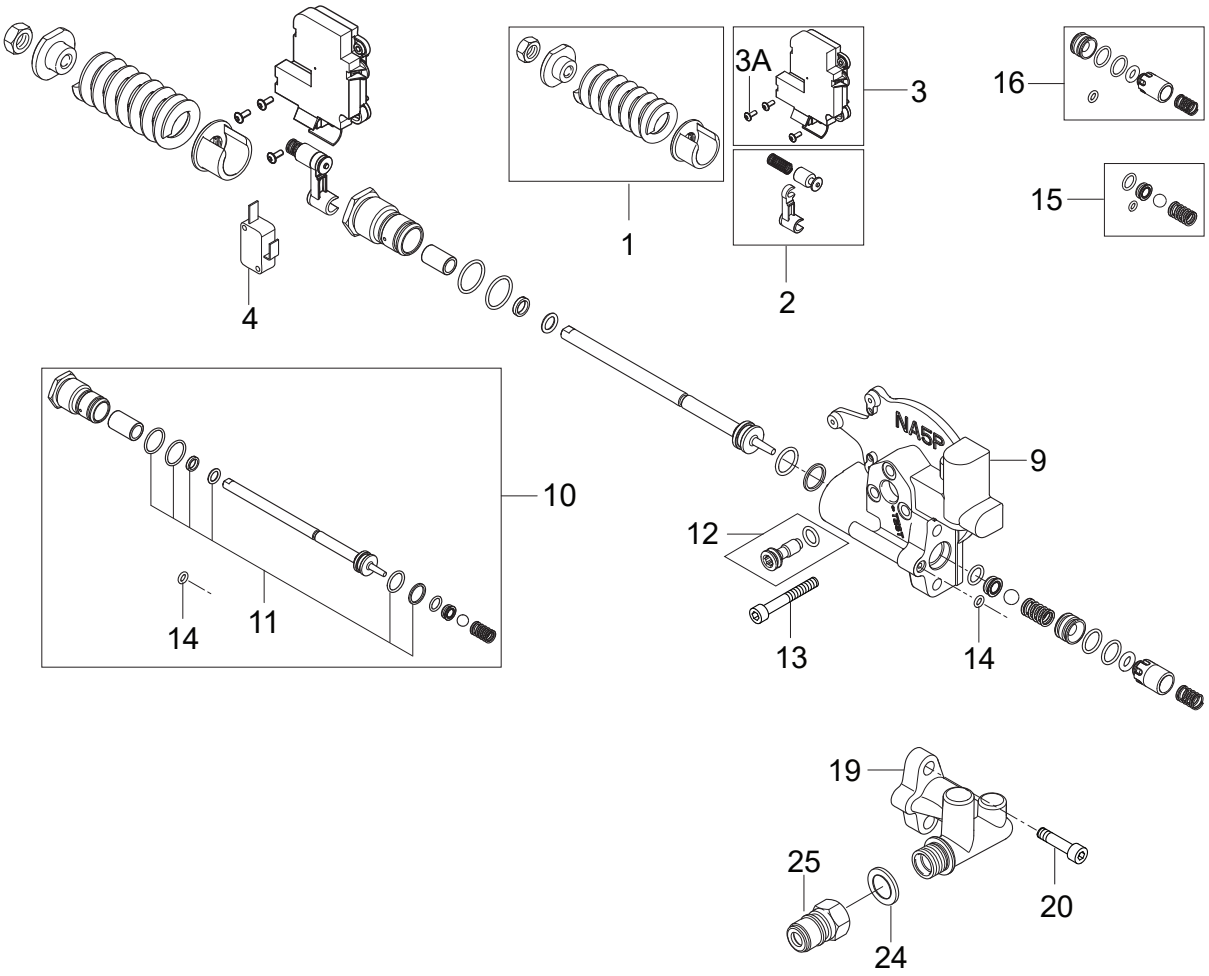
3A
3
16
15
1
2
4
10
9
NA5P
12
14
11
13
14
19
25
20
24

Pos.	Product no	QTY	Description	Notes
1	101118091	1	UNLOADER SPRING REP. KIT-PAINTED NA5 PA	[1]
2	101118090	1	MICROSW. ACTIVATION REP. KIT NA5 PA	
3	101118084	1	MICROSWITCH BOX W/O MICROSW. NA5 PA	
3A	107141515	3	SCREW M3X8 ISO7380 FZG TORX 10	
4	101118011	1	END SWITCH 250V 5A W.WIRE FSH/FS 6.3 KIT	
4A	107143308	1	CABLE FOR MICRO SWITCH MC5	
9	107140932	1	UNLOADER PA NA5 W/O WATERREG./DETERG.	
10	101118294	1	STEM + SEALING REP. KIT NA5/5.2/6/6+ PA	[2]
11	101118083	1	SEAL KIT FOR STEM FOR NA5 PA	
12	107144137	1	UNLOADER PLUG NA5	
13	5100	3	SCREW M6X45 ISO 4762	
14	107141514	1	O-RING D4 X D1.5 NBR 90	
15	101118295	1	BYPASS VALVE REP. KIT NA5.2 PA	
16	101118254	1	HOLDING PRESSURE VALVE REP. KIT NA5.2 PA	
19	107140933	1	OUTLET FITTING NA5 PA W/O WAT.REG./DET.	
20	8894	2	SCREW DIN 912 M8 X 20 8.8 FZB	
24	1801075	1	PACK.RING D23.8XD14.96 3/8NBR SELF-CENT.	
25	1603101	1	NIPPLE F/QUICK COULING 3/8 SS	[3]
25	1600493	1	NIPPEL F. Q-COUPL. 3/8 INCH	

Part Notes:

[1] - 5-41 PA – MC 5M 180/840 PA

5-53 PA - MC 5M 200/1000 PA

[2] - TSB-PPW-2017-005 Low pressure—Unloader valve for NA5.2 pump can leak internally

DE TSB-PPW-2017-005 Niederdruck-Unloader Ventil für die NA5.2 Pumpe kann...

[3] - INOX

No Diagram Available

Parts List Only

Pos.	Product no	QTY	Description	Notes
1	106403122	1	ERGO 2000 STANDARD W. HOSE SWIVEL	[1]
1	106403154	1	ERGO 2000 SPRAY GUN W/O LOGO ACC.	[2]
2	106403010	1	TORNADO PLUS 1120 BEND W/O NOZZLE	[3]
3	101119741	1	NOZZLE 0500 IND. RING YELLOW	[4]
3	101119746	1	NOZZLE 0650 IND. RING LIGHT GREEN	[5]
3	101119742	1	NOZZLE 0530 IND. RING RED	[6]
3	101119738	1	NOZZLE 0400 IND. RING METAL GREY	[7]
3	301150005	1	TORNADO NOZZLE 0475	[8]
4	106403003	1	TURBOHAMMER PLUS 1130 STRAIGHT W12 0500	[9]
4	106402291	1	TURBOHAMMER PLUS 1125 STRAIGHT W11 0500	[10]
4	65437	1	TURBOHAMMER NOZZLE W12 040	[7]
5	101405770	1	HOSE DN8 2 WIRE 10M W.ERGO FEMALE COUPL	[11]
5	101406175	1	HP-HOSE DN6 15M 3/8-3/8 F. QUICK COUPL	[12]
5	301001101	1	HOSE DN8 1 WIRE 20M W.ERGO FEMALE COUPL.	[13]
5	301001100	1	HOSE DN8 1 WIRE 15M W.ERGO FEMALE COUPL.	[11]
10	106403142	1	SANDFILTER RACKED KIT P5 PA/FA P6-P7FA	[14]
11	106403165	1	SANDFILTER FOR WBT KIT	[15]
12	106403143	1	HOSE REEL COMPLETE	[16]
13	101118105	1	HOSE GUIDE COMPLETE	[16]
14	106403145	1	FRONT WHEEL KIT	[17]
15	106403144	1	WATER BRAKE TANK KIT	[18]
16	106403160	1	CRANE ROUNDSLING 1000KG 50CM	[19]
17	106403162	1	DETERGENT TANK W. SEALING CAP - 2.5 LTR.	[20]
18	106403166	1	LOW PUMP OIL SAFETY FUNCTION FOR POS. 5	[21]
NS	106408164	1	BOTTLE FOR FOAM SPRAYER 2 L	

Part Notes:

[1] - ERGO 2000 Spray handle

[2] - UNITOR

[3] - TORNADO PLUS lance

[4] - 5-47 J, 5-53, 5-56

[5] - 5-52 US

[6] - 5-62

[7] - 5-41

[8] - 5-32

[9] - 5-32

TURBOHAMMER PLUS lance

[10] - 5-53
TURBOHAMMER PLUS lance

[11] - HOSES Overview

[12] - POSEIDON 5-41 PAXT, 5-53 PAXT
HOSES Overview

[13] - POSEIDON 5- 62 PAXT
HOSES Overview

[14] - SANDFILTER KIT POSEIDON 5-6-7 from September 2012

[15] - PRUNED-NO REPLACEMENT
SANDFILTER FOR WBT POSEIDON 5-6-7 from Septemper 2012

[16] - Hose reel

[17] - PRUNED-NO REPLACEMENT
106403145 - Front wheel kit

[18] - PRUNED-NO REPLACEMENT
106403144 - WATER BRAKE TANK POSEIDON 5-6-7 from September 2012

[19] - PRUNED ACCESSORY

Crane roundsling 1000kg 50cm

[20] - 106403162 - Detergent tank with safety cap

[21] - PRUNED-NO REPLACEMENT

106403166 - Low pump oil safety function for POSEIDON 5

No Diagram Available

Parts List Only

Pos.	Product no	QTY	Description	Notes
	101118106	1	HOSE GUIDE BRAKE COMPLETE KIT	
	101118111	1	HOSE GUIDE KIT	
	101118102	1	HOSE REEL HANDLE KIT	
	107141632	1	CABLE HOOK	
	107141668	1	WATER INLET PIPE NA5/NA6	
	107141652	1	MANOMETER TUBE	
	107141679	1	HOSE GUIDE SLEEVE OPEN	
	107141676	1	SWIVEL SCREW FOR HOSE REEL	
	107141663	1	RUBBER GROMMET	
	107141635	1	DETERGENT BOTTLE 2.5 L	
	107141664	1	CAP FOR DETERGENT TANK	
	107141670	1	RUBBER ELBOW NA5/NA6	
	107141667	1	LOCK WASHER	
	107141629	1	HOSE HOOK	
	107141650	1	PLATE FOR MANOMETER	
	107141634	1	REAR END	
	101118103	1	HOSE GUIDE PARTS KIT	
	107141633	1	TERMINAL BLOCK 4Q PE	[1]
	107141648	1	MANOMETER 0-300 BAR	
	107141630	1	LANCE HOLDER NA	
	107141653	1	MANOMETER TUBE FA MODELS	
	101118104	1	SPRING AND LOCK NUT KIT	
	101118101	1	HANDLE KIT	
	107141615	1	RUBBER FOOT	
	107141627	1	SCREW K50X40 T20	
0A	101118080	1	SEAL KIT FOR WATER INLET FOR NA5 FA PA	
0A	107144100	1	VALVE KIT - NA5	
0A	101118083	1	SEAL KIT FOR STEM FOR NA5 PA	
0A	101118314	1	PRESSURE BUILD UP VALVE HIGH FLOW KIT	[2]
0A	107144102	1	OIL SEAL KIT - NA5	
0A	101118050	1	SEALING KIT FOR NA6	
0A	3004221	1	O-RING 16X2 NBR 70SH	
0A	101118056	1	RETURN VALVE BY-PASS - KIT NA6	[3]
0A	101118055	1	MAGNET AND HOUSE FOR FLOW SWITCH-KIT NA6	
0A	101117926	1	FILTER	
0B	101118295	1	BYPASS VALVE REP. KIT NA5.2 PA	
0B	101118294	1	STEM + SEALING REP. KIT NA5/5.2/6/6+ PA	
0B	107144104	1	SPRING KIT - NA5	
0B	101118239	1	PISTON KIT - NA5.2	
0B	106408216	1	REED SWITCH	
0B	107144112	1	VENTURI TUBE D2.03 NATURE	
0C	101118242	1	WOBBLE DISC 10.9 DEG. BEARING KIT NA5.2	
0C	101118247	1	WOBBLE DISC 8.7 DEG. BEARING KIT NA5.2	
0C	101118245	1	WOBBLE DISC 9.15 DEG. BEARING KIT NA5.2	
0C	101118241	1	WOBBLE DISC 12 DEG. BEARING KIT NA5.2	
0C	101118246	1	WOBBLE DISC 8.4 DEG. BEARING KIT NA5.2	
0C	101118249	1	WOBBLE DISC 7.2 DEG. BEARING KIT NA5.2	
0C	101118243	1	WOBBLE DISC 10.2 DEG. BEARING KIT NA5.2	
0C	101118051	1	PLUG FOR UNLOADER VALVE FA - KIT NA6	
0C	301000263	1	FUSE 0.63A/500AT Ø 6.	
0C	301001058	1	CAM SWITCH 0-1 10A 400VAC	
0C	107142761	1	START RELAY RVA4G0C	
0C	107141957	1	MOTOR 4KW 200/3/50-60HZ JP 5-47 JP	
0C	101118091	1	UNLOADER SPRING REP. KIT-PAINTED NA5 PA	
0C	101118117	1	CONTROL UNIT - KIT NA5	
0C	31000149	1	REAR BEARING 6306 2Z C3 150 DEGREES RF	
0C	107141619	1	CAPACITOR 170MF	
0C	103822303	1	CONTACTOR CJX2-D18 18A 400V 3P+NO	
0C	301000402	1	RESISTANCE 15KOHM/7W	

Pos.	Product no	QTY	Description	Notes
0C	31000151	1	REAR BEARING EME	
0C	101118089	1	NON RETURN VALVE REP. KIT NA5 PA	
0C	107143182	1	CAPACITOR 70UF 450/500V RP-3	
0C	107141954	1	MOTOR 5.5 KW 220/230-400/440/3/50/60 EU	
0C	101118090	1	MICROSW. ACTIVATION REP. KIT NA5 PA	
0C	107141956	1	MOTOR 2.2 KW/230/1 50HZ	
0C	64773	1	AUXILIARY CONTACT 100-SBL11	
0C	101118011	1	END SWITCH 250V 5A W.WIRE FSH/FS 6.3 KIT	
0C	103822314	1	CONTACTOR CJX2-D32 32A 230V 3P+NO	
0C	107141953	1	MOTOR 6.7KW 220-440 230-400 3 50/60HZ EU	
0C	101118078	1	WATER INLET KIT FOR NA5	
0C	63910	1	CONTACT 100-C23KF10 23	
0C	1119406	1	NON RETURN VALVE REP. KIT	
0C	106408189	1	NUT M8 X 1 FOR UNLOADER VALVE FA	
0C	107141955	1	MOTOR 5.2 KW/220/1 60HZ 5-52 US	
0C	107141967	1	D-BEARING COVER COMPLETE NA5.2	
0C	103822304	1	CONTACTOR CJX2-D18 18A 230V 3P+NO	
0C	107141958	1	MOTOR 4KW 230-400/220-440 3/50-60HZ NA5	
0C	107141666	1	PCB POSEIDON 5-6-7	

Part Notes:

[1] - ECN-1010232
[2] - TSB-PPW-2020-001 MH 4_MH 5M Damper Valve removed
[3] - Spring included: OD8,2 x L9,3 x d0,5

© 2023 - Nilfisk A/S