PARTS LIST

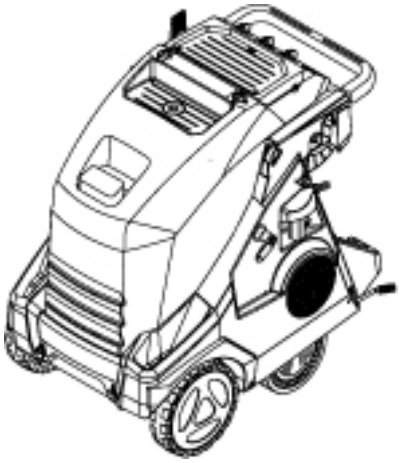

2025.08.28

NILFISK

TABLE OF CONTENTS

Cabinet . . . 1
Chassis large . . . 3
Water break tank . . . 5
Hose reel . . . 7
Water inlet_FA . . . 9
Water inlet_PA . . . 11
Anti-scale . . . 13
Fuel tank 30L . . . 15
Electric box for motor 1~,3~ STAR and 3~ DELTA . . . 17
Electric box for motor Star/Delta . . . 19
1x detergent . . . 21
Electric box . . . 23
Cables and wires . . . 26
Motor pump . . . 28
Cylinder block . . . 30
Water flow regulation_FA . . . 32
Unloader_PA . . . 34
Flow control FA . . . 36
Flow control PA_ w manometer . . . 38
Burner . . . 40
Fan . . . 42
Boiler B5 . . . 44

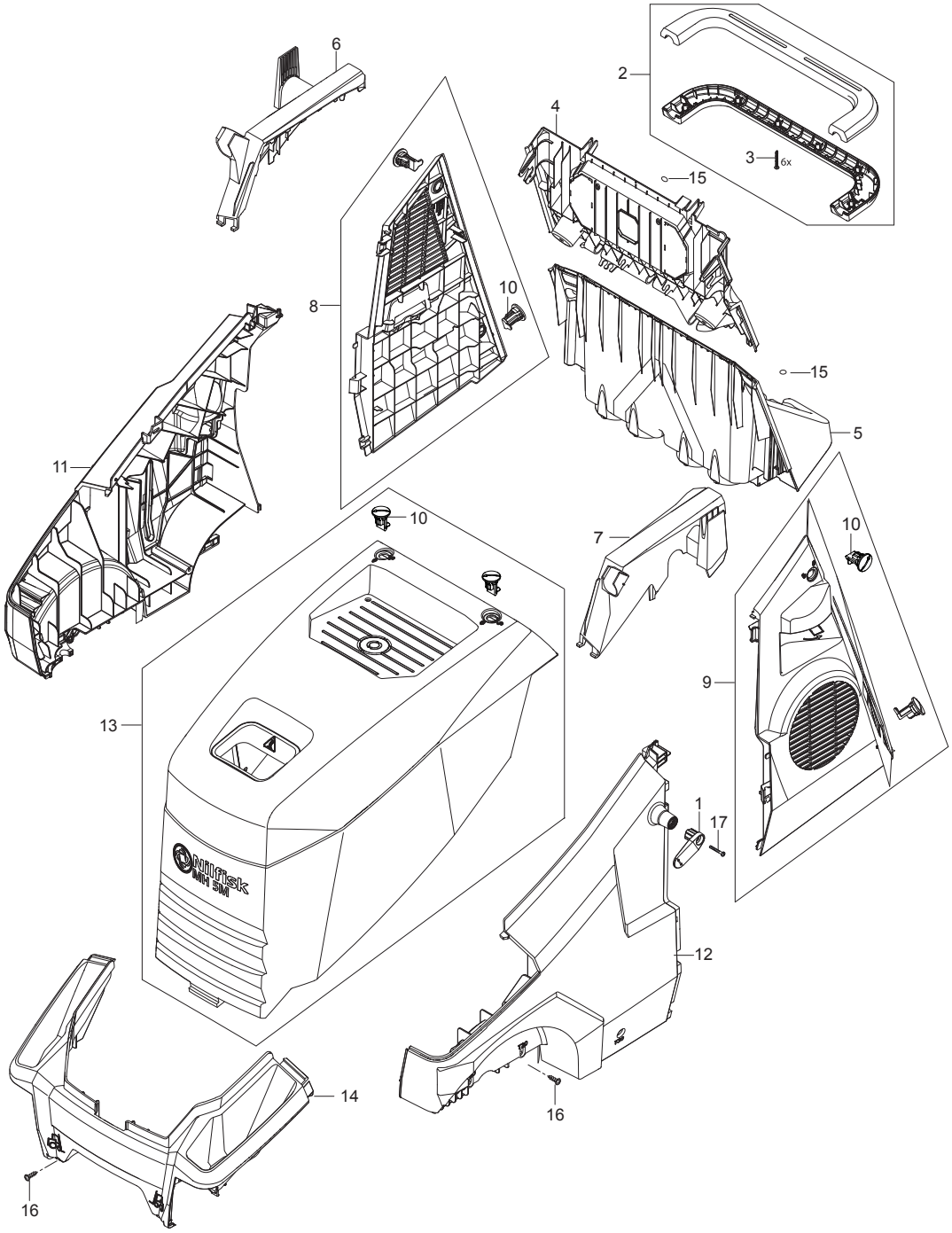
6
2
4
3
6x
15
8
10
15
5
11
10
7
10
9
13
1
17
12
14
16
16

Pos.	Product no	QTY	Description	Notes
1	107143025	1	CABLE HOOK CLAMP BLUE	
2	101118192	1	HANDLE KIT	
3	909100148	6	SCREW K40X30 WN 1452	
4	107143013	1	REAR END TOP	
5	107143014	1	REAR END BOTTOM	
6	107143021	1	COVERING FOR HANDLE RIGHT	
7	107143022	1	COVERING FOR HANDLE LEFT	
8	107143023	1	DOOR W/LOCKS MPU NA5-NA6 RIGHT	
9	107143019	1	DOOR LEFT W/LOCKS	
10	301001261	6	LOCKING BOLT D29X35	
11	107143130	1	SIDE BUMPER LARGE RIGHT	
12	107143131	1	SIDE BUMPER LARGE LEFT	
13	101118201	1	CABINET MH 5M NILFISK KIT	
14	107143015	1	FRONT BUMPER	
15	107143009	6	BLIND PLUG D16.5 FOR T30 BLACK PE	
16	107143018	12	SCREW M6X16	
17	107141838	7	SCREW K50X18 WN1451 BLACK TORX20	

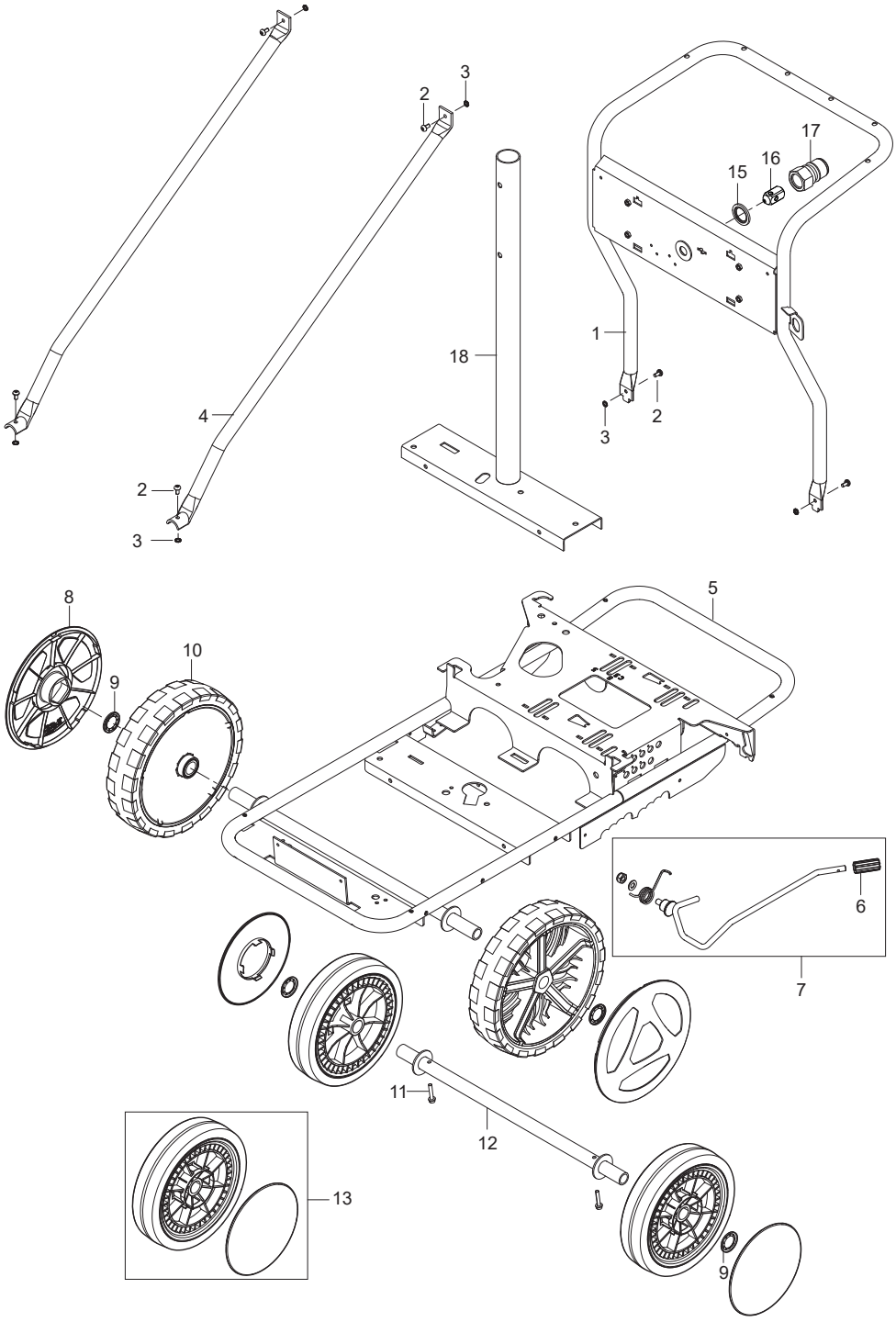
3
2
17
16
15
1
18
2
3
4
2
3
8
10
9
5
6
7
11
12
13
9

Pos.	Product no	QTY	Description	Notes
1	31001157	1	FRAME HANDLE	
2	107143018	6	SCREW M6X16	
3	107143146	6	WASHER SERRATED M6	
4	31001158	2	HANDLE STIFFENER LONG	
5	31001159	1	FRAME LARGE WELDED	
6	107143028	1	BRAKE KNOB	
7	101118229	1	BRAKE ARM LONG KIT	
8	107145780	2	WHEEL CAP FOR WHEEL Ø300X65 - NILFISK	
9	46363	4	CLAMPING RING D25	
10	107145637	2	WHEEL D300X65	
11	107143027	2	SCREW M6X35 SW10 DIN7500D FZB	
12	31001160	1	WHEEL AXLE REAR	
13	107143304	2	WHEEL D250 HEAVY LOAD W/CAP	
15	1801075	1	PACK.RING D23.8XD14.96 3/8NBR SELF-CENT.	
16	107143066	1	PISTON	
17	1600493	1	NIPPEL F. Q-COUPL. 3/8 INCH	
18	31001161	1	BOILER TUBE W. BRACKET LARGE	

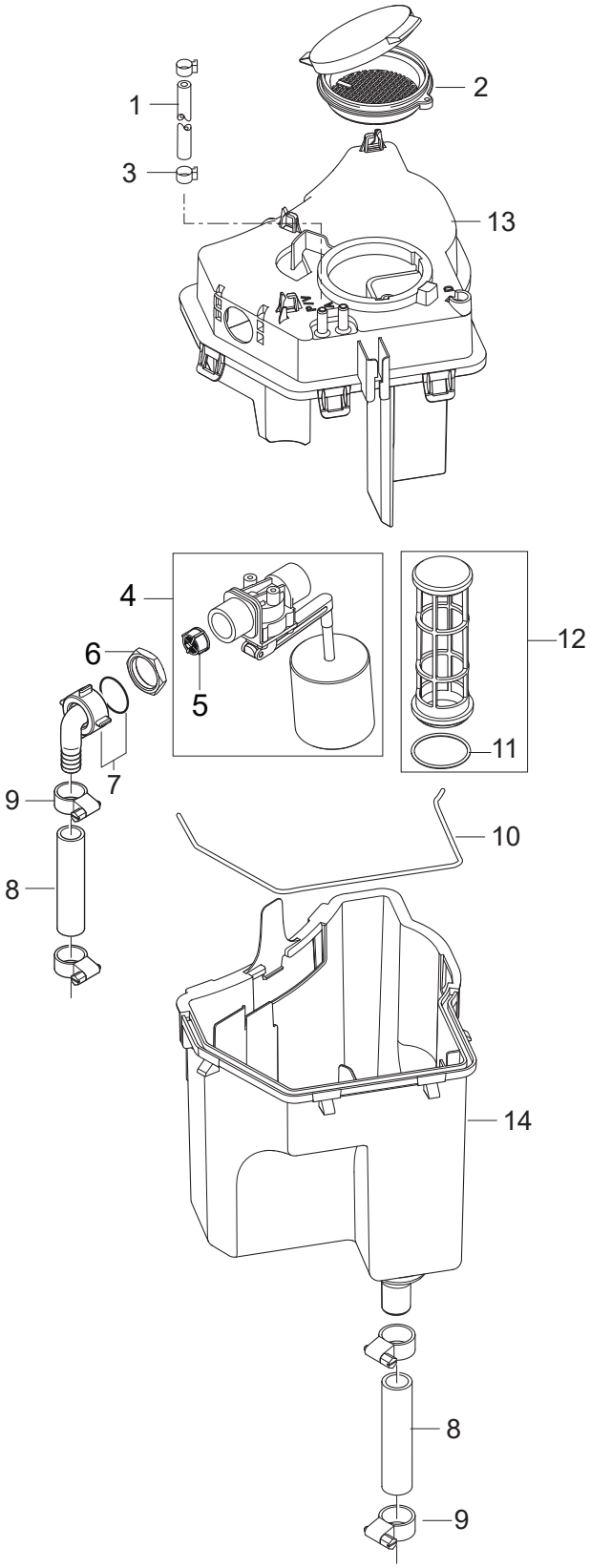
1
2
3
13
4
6
5
12
11
7
9
10
8
14
8
9

Pos.	Product no	QTY	Description	Notes
1	101406100	1	HOSE DN 6X3 5M	
2	301000561	1	TANK COVER DETERGENT	
3	301001133	2	HOSE CLAMP 10/7	
4	101117784	1	FLOAT VALVE	
5	34218	1	FILTER FOR FLOAT VALVE Ø19 KU	
6	1800341	1	LOCK NUT 3/4IN	
7	107143084	1	HOSE COUPLING 90° 20X3/4 PP W/NUT/GASKET	
8	107143031	1	FUELFLEX HOSE D28/D20 10BAR/20°	
9	8298	4	HOSE CLIP 16-27	
10	101406054	1	SPONGE RUBBER Ø 4 1M	
11	107143032	1	O-RING D30X2 SHORE70 NBR BLACK	
12	106403194	1	FILTER FOR WATER BREAK TANK ACCESSORY	
13	107143060	1	COVER FOR WATER TANK	
14	107143030	1	WATER BREAK TANK	

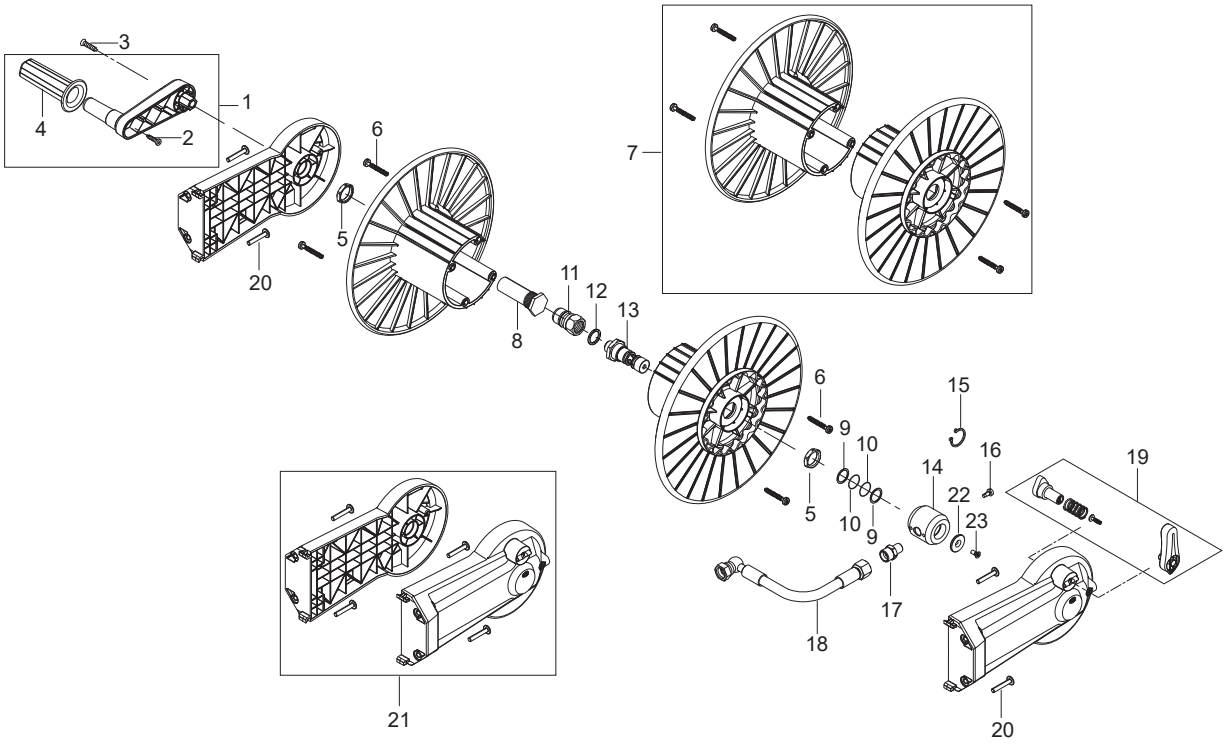
3
4
1
2
20
6
5
7
11
12
13
8
6
9
10
5
10
9
15
16
14
22
23
19
17
18
21
20

Pos.	Product no	QTY	Description	Notes
0	106403184	1	HOSE REEL NILFISK ACCESSORY	
1	101118215	1	HANDLE FOR HOSE REEL NILFISK	
2	107141838	2	SCREW K50X18 WN1451 BLACK TORX20	
3	107141673	1	SCREW M6X45 ISO 7380 BLACK TORX	
4	107143007	1	ROTATING HANDLE FOR HOSE REEL NILFISK	
5	62696	2	HEXAGON NUT M24X1.5X6	
6	909100153	4	SCREW 6X40	
7	101118209	1	HOSE REEL SIDE KIT	
8	107141675	1	AXLE FOR HOSE REEL	
9	107143017	2	BACK-UP RING	
10	19620	2	O-RING 15.54X2.62 NBR 70SH	
11	1600493	1	NIPPEL F. Q-COUPL. 3/8 INCH	
12	1801075	1	PACK.RING D23.8XD14.96 3/8NBR SELF-CENT.	
13	107143123	1	SWIVEL FOR HOSE REEL	
14	101118317	1	BEARING BUSH KIT	[1]
15	1802057	1	CIRCLIP EXTERNAL 20X1.2 STEEL. DIN 471	[2]
16	107141690	1	SCREW M5X12 DIN7985 TORX TAPTITE	
17	54590	2	FITTING XGE12L 1/4NPT	
18	107143114	1	CONNECTION HOSE DN8 FOR HOSE REEL	
19	101118212	1	020KE HANDLE FOR HOSE REEL NILFISK KIT	
20	107143010	4	SCREW M6X35	
21	101118208	1	HOSE REEL ADAPTOR KIT	
22	107143125	1	WASHER 25 FOR COUNTERSUNK M5	[3]
23	107143124	1	COUNTERSUNK M5X12 ISO 14581	[3]
		1	Mounting instr. for Hose Reel Nilfisk	[4]

Part Notes:

[1] - TSB-PPW-2019-005 MH Hose Reel Screw 107143124 can break

DE TSB-PPW-2019-005 MH Schlauchtrommel Schraube 107143124 kann brechen

TSB-PPW-2019-005 vis cassée à l'enrouleur des MH

[2] - Up to 07.2016

[3] - TSB-PPW-2016-018 MH 4M Hose Reel Circlip

[4] - Mounting instructions MH Nilfisk hose reel

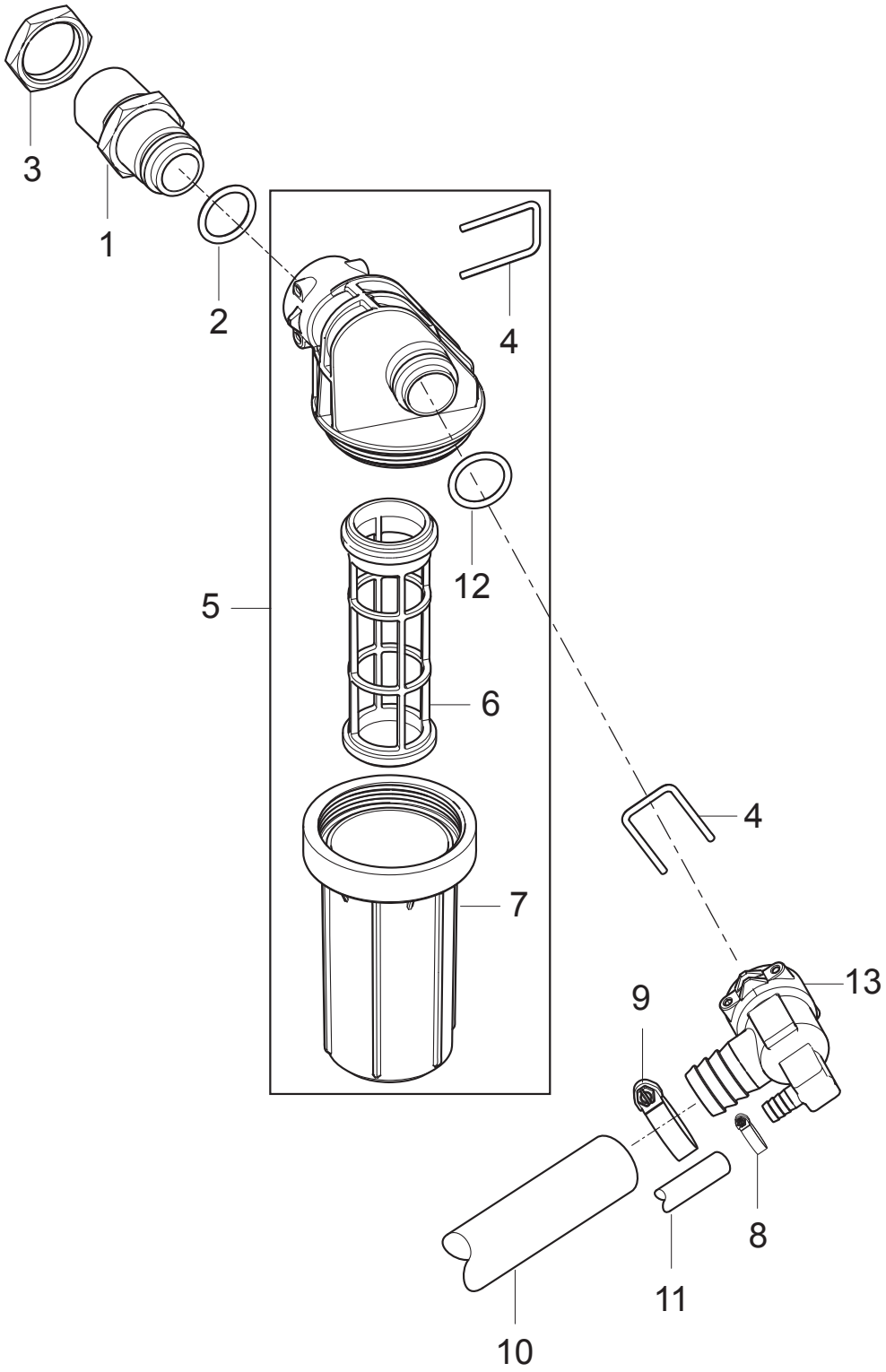
3
1
2
4
5
12
6
4
7
13
9
8
11
10

Pos.	Product no	QTY	Description	Notes
1	107143086	1	FITTING FOR WATER INLET	
2	107143088	2	O-RING 18.72X2.62	
3	1800341	1	LOCK NUT 3/4IN	
4	107143085	2	LOCK PIN	
5	107144272	1	FILTER CPL. MH 5000MM2 50µ ACCESSORY	
6	31001100	1	FILTER CARTRIDGE WITHOUT FLANGE	[1]
7	31001011	1	GLAS FOR WATER FILTER	[1]
8	11654	1	HOSE CLAMP Ø11.5	
9	8298	1	HOSE CLIP 16-27	
10	107143031	1	FUELFLEX HOSE D28/D20 10BAR/20°	
11	101406100	1	HOSE DN 6X3 5M	
12	107143088	1	O-RING 18.72X2.62	
13	107143087	1	WATER INLET FITTING FOR FA	

Part Notes:

[1] - TSB-PPW-2020-006 Water inlet filter cartridge and filter glass improved

DE TSB-PPW-2020-006 Wasserzulauffilter Glas und Filtereinsatz verbessert

TSB-PPW-2020-06 Cartouche de filtre d'entrée d'eau et bocal de filtre amélioré

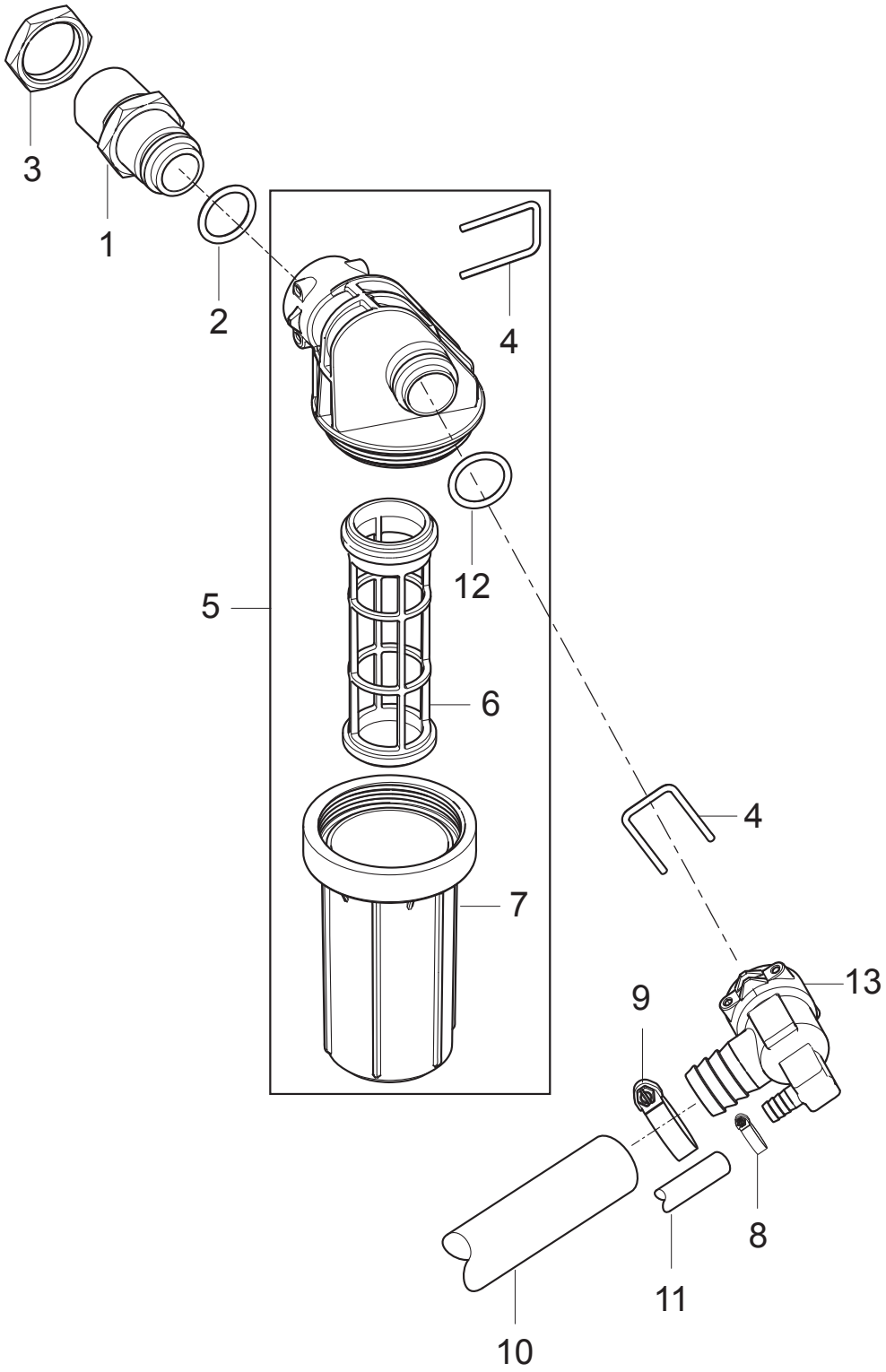
3
1
2
4
12
5
6
4
7
13
9
8
11
10

Pos.	Product no	QTY	Description	Notes
1	107143086	1	FITTING FOR WATER INLET	
2	107143088	2	O-RING 18.72X2.62	
3	1800341	1	LOCK NUT 3/4IN	
4	107143085	2	LOCK PIN	
5	107144272	1	FILTER CPL. MH 5000MM2 50µ ACCESSORY	
6	31001100	1	FILTER CARTRIDGE WITHOUT FLANGE	[1]
7	31001011	1	GLAS FOR WATER FILTER	[1]
8	11654	1	HOSE CLAMP Ø11.5	
9	8298	1	HOSE CLIP 16-27	
10	107143031	1	FUELFLEX HOSE D28/D20 10BAR/20°	
11	101406100	1	HOSE DN 6X3 5M	
12	107143088	1	O-RING 18.72X2.62	
13	107143089	1	WATER INLET FITTING FOR PA	

Part Notes:

[1] - TSB-PPW-2020-006 Water inlet filter cartridge and filter glass improved

TSB-PPW-2020-06 Cartouche de filtre d'entrée d'eau et bocal de filtre amélioré

DE TSB-PPW-2020-006 Wasserzulauffilter Glas und Filtereinsatz verbessert

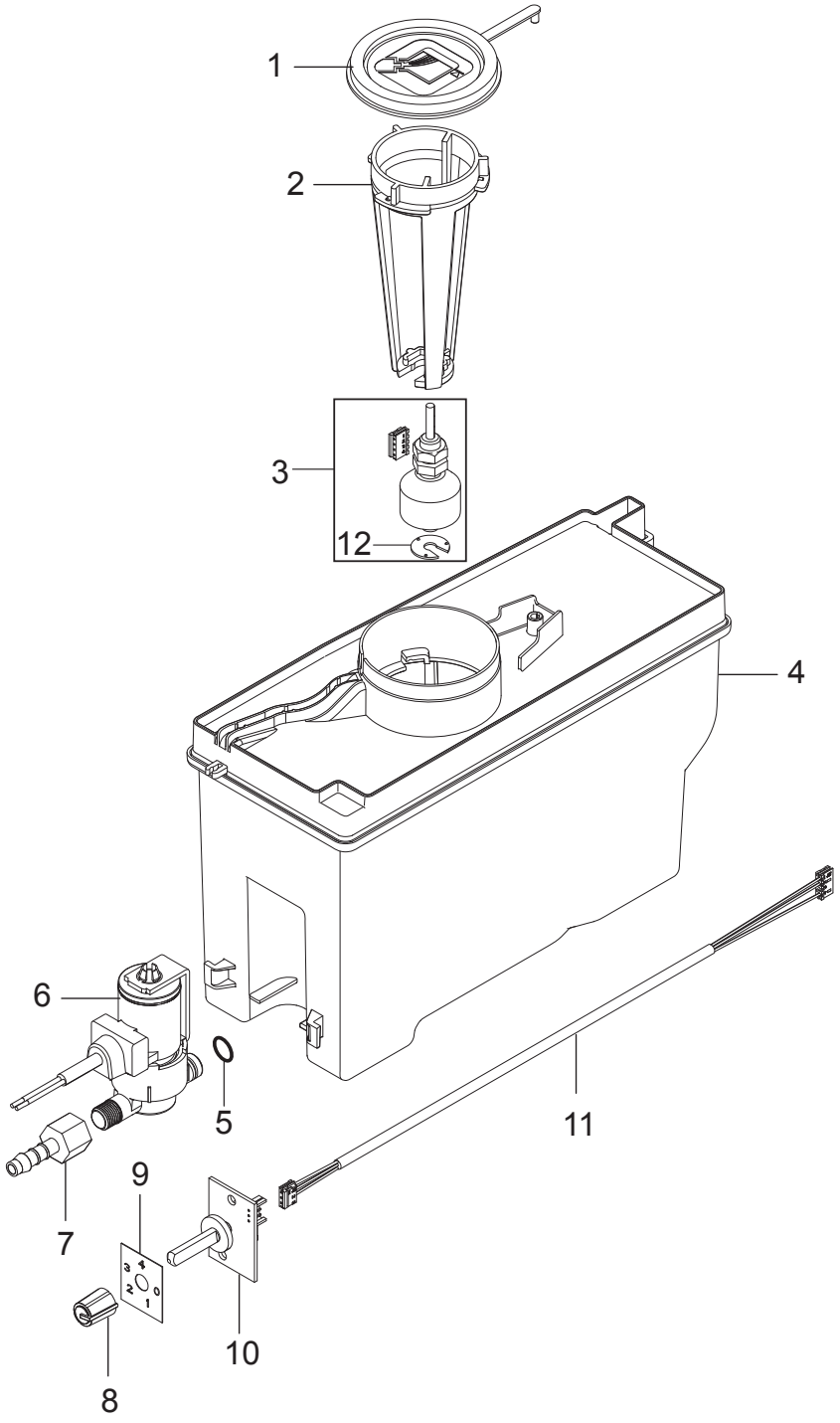
1
2
3
12
4
6
5
11
7
9
10
8

Pos.	Product no	QTY	Description	Notes
1	45646	1	COVER	
2	107143040	1	LEVELSENSOR BRACKET FOR ANTISCALE	
3	101118214	1	FLOAT SWITCH KIT	
4	107143041	1	ANTISCALE TANK CPL.	
5	31001036	1	O-RING 6X2 NBR 70SH	
6	107143037	1	DOSING VALVE RPE 24VAC	
7	107143036	1	HOSE FITTING D6X1/8 PA	
8	107318222	1	PUSH-ON KNOB 11MM/6MMD/WH	
9	107143042	1	LABEL FOR ANTISCALE	
10	101117780	1	PCB FOR POTENTIONMETER	
11	107143038	1	CABLE FOR ADJUSTMENT ANTI SCALE	
12	107142593	1	HOLDING WASHER PE	[1]

Part Notes:

[1] - TSB-PPW-2016-017 Locking ring for oil level switch falling off

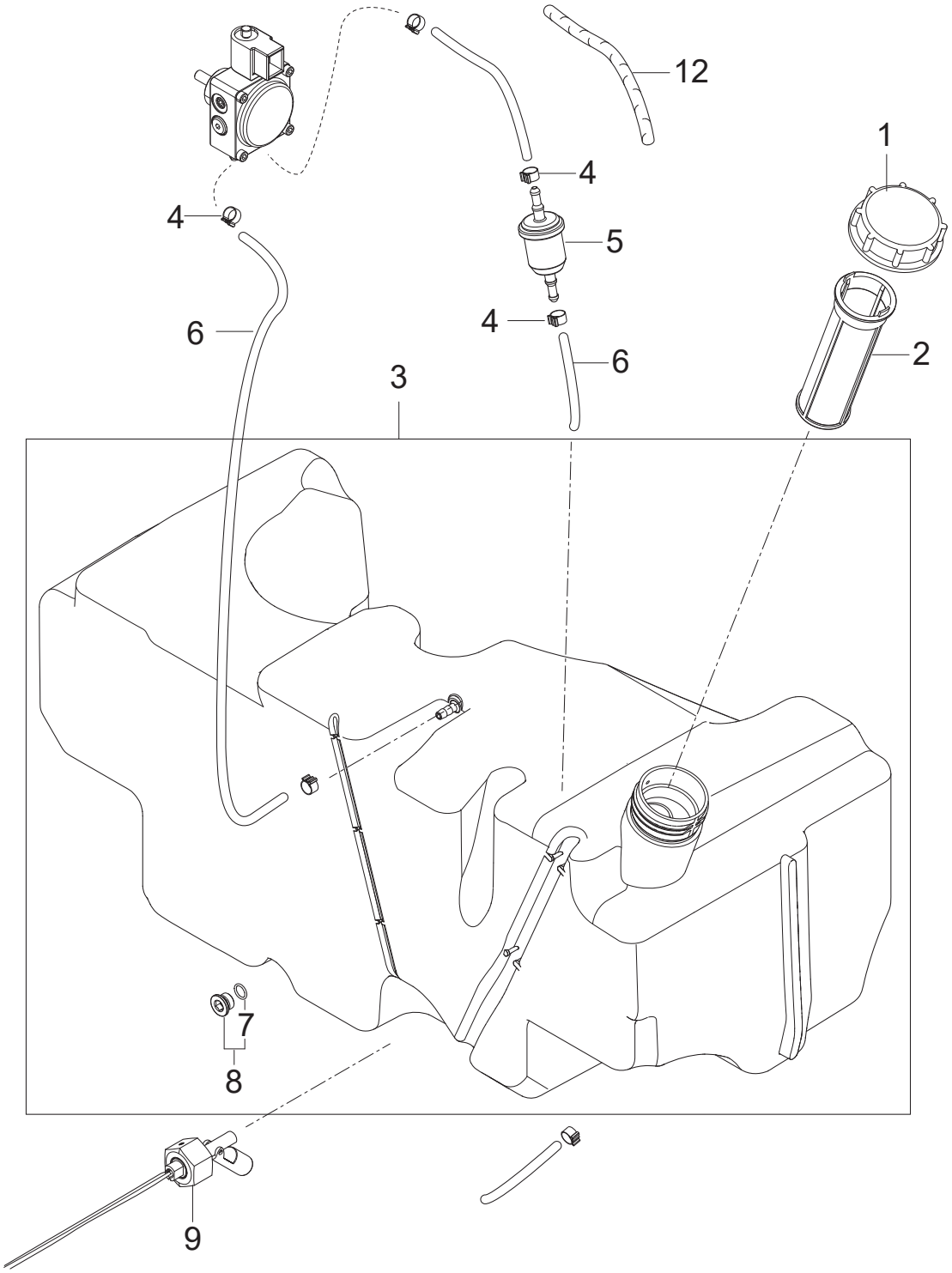
12
1
4
4
5
4
6
6
2
3
7
8
9

Pos.	Product no	QTY	Description	Notes
1	107143034	1	FUEL TANK LID - RED	
2	107144862	1	STRAINER Ø49,5X140	
3	107143136	1	FUEL TANK 30L	
4	301001133	6	HOSE CLAMP 10/7	
5	301002926	1	INLINE FILTER 101X36.5X6 KU	
6	106408244	0.35	HOSE D6X2.5 - 5 METERS	
7	3000072	1	O-RING 10.1X1.6 NBR 70SH	
8	6180906	1	PLUG WITH O-RING	[1]
9	107143033	1	LEVEL SENSOR FUEL TANK	
10	107143164	1	BEND PROTECTOR	[2]

Part Notes:

[1] - NO REPLACEMENT

[2] - DE TSB-PPW-2017-006 MH 3, 4, 5, 6, 7 Kraftstoffschlauch kann durch zu st...

TSB-PPW-2017-006 MH 3, 4, 5, 6, 7 Fuel hose can bend and block for fuel

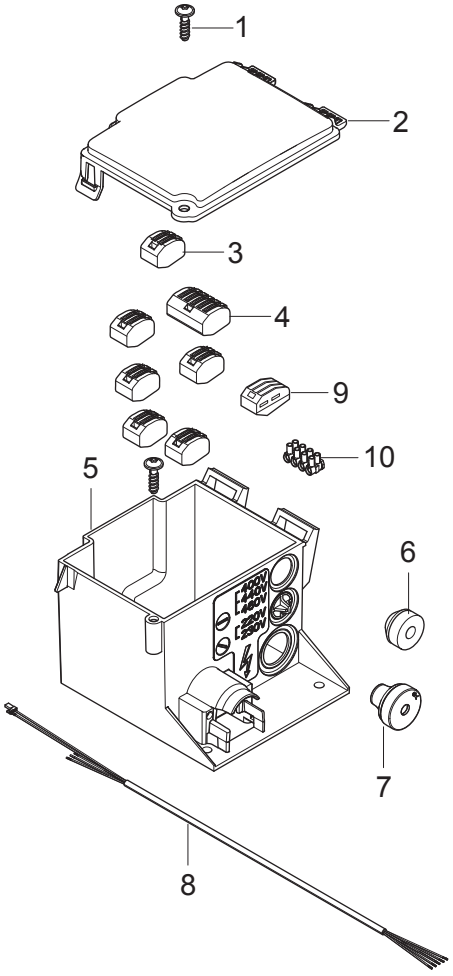
1
2
3
4
9
10
5
6
7
8

Pos.	Product no	QTY	Description	Notes
1	107141838	1	SCREW K50X18 WN1451 BLACK TORX20	
2	301000782	1	COVER ELEC.BOX 128.2X112.	
3	107143069	6	SNAP TERMINAL 2 POL	
4	301002165	1	CABLE CLAMP TERMINAL 5POL WAGO 222-415	
5	107143074	1	E-BOX	
6	3803764	1	RUBBER SEAL TET 5-7C	
7	3803772	1	CABLE GROMMET TET 7-10C	
8	107143075	1	MOTOR CABLE 5G1.5 FOR 3~	[1]
8	107143076	1	MOTOR CABLE 5G1.5 FOR 1~	[2]
8	107143071	1	MOTOR CABLE 5G2.5 FOR STAR/DELTA	[3]
8	107143129	1	MOTOR CABLE 4G4 DELTA MH5-6-7	[4]
9	107143069	1	SNAP TERMINAL 2 POL	[5]
10	107143158	1	TERMINAL BLOCK 4-POL 10MM2	[6]

Part Notes:

[1] - MH4, MH5-200
[2] - MH4 1ph, MH5 1ph
[3] - MH4 (JP), MH5 (not MH5-200), MH6, MH7
[4] - MH6 JP, MH7 JP
[5] - 1~
[6] - MH5-6-7 - Delta, JP

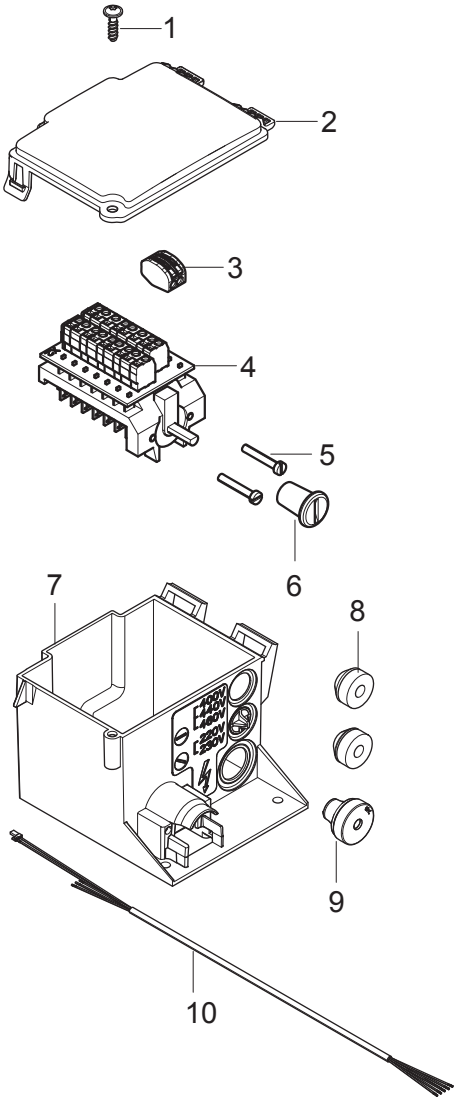
1
2
3
4
5
6
7
8
9
10

Pos.	Product no	QTY	Description	Notes
1	107141838	1	SCREW K50X18 WN1451 BLACK TORX20	
2	301000782	1	COVER ELEC.BOX 128.2X112.	
3	107143069	1	SNAP TERMINAL 2 POL	
4	107143073	1	PCB SWITCH STAR/DELTA	
5	101117739	2	SCREW HEX M4X22-8.8 A2K DIN912	
6	64580	1	ROTARY KNOB	[1]
7	107143074	1	E-BOX	
8	3803764	2	RUBBER SEAL TET 5-7C	
9	3803772	1	CABLE GROMMET TET 7-10C	
10	107143071	1	MOTOR CABLE 5G2.5 FOR STAR/DELTA	

Part Notes:

[1] - TSB-PPW-2016-007 Rotary knob for Voltage selector switch 230V-400V must be sealed with lacquer

DE TSB-PPW-2016-007 Drehknopf des Spannungsauswahlschalters 230V-400V muss mit Lack versiegelt werden

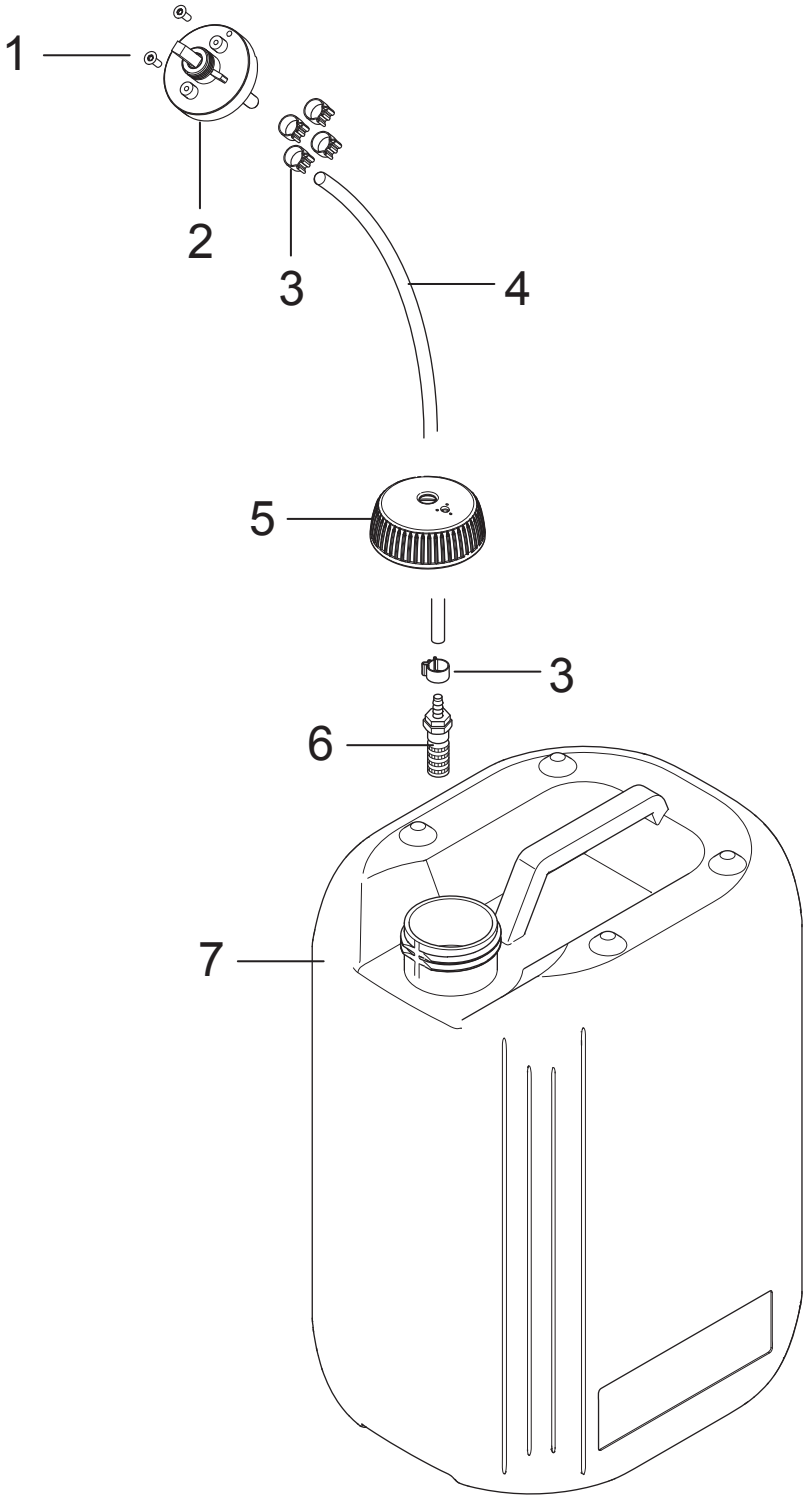
1
2
3
4
5
3
6
7

Pos.	Product no	QTY	Description	Notes
1	1814730	2	SCREW 35X10B W1423	
2	301001000	1	VALVE 51X70	
3	301001133	8	HOSE CLAMP 10/7	
4	106408243	1	HOSE 1/4INCH TRANSPARENT - 5 METERS	
5	107141664	2	CAP FOR DETERGENT TANK	
6	107145440	2	STRAINER VALVE COMPL. KIT	
7	80518	1	CANISTER 10 L	

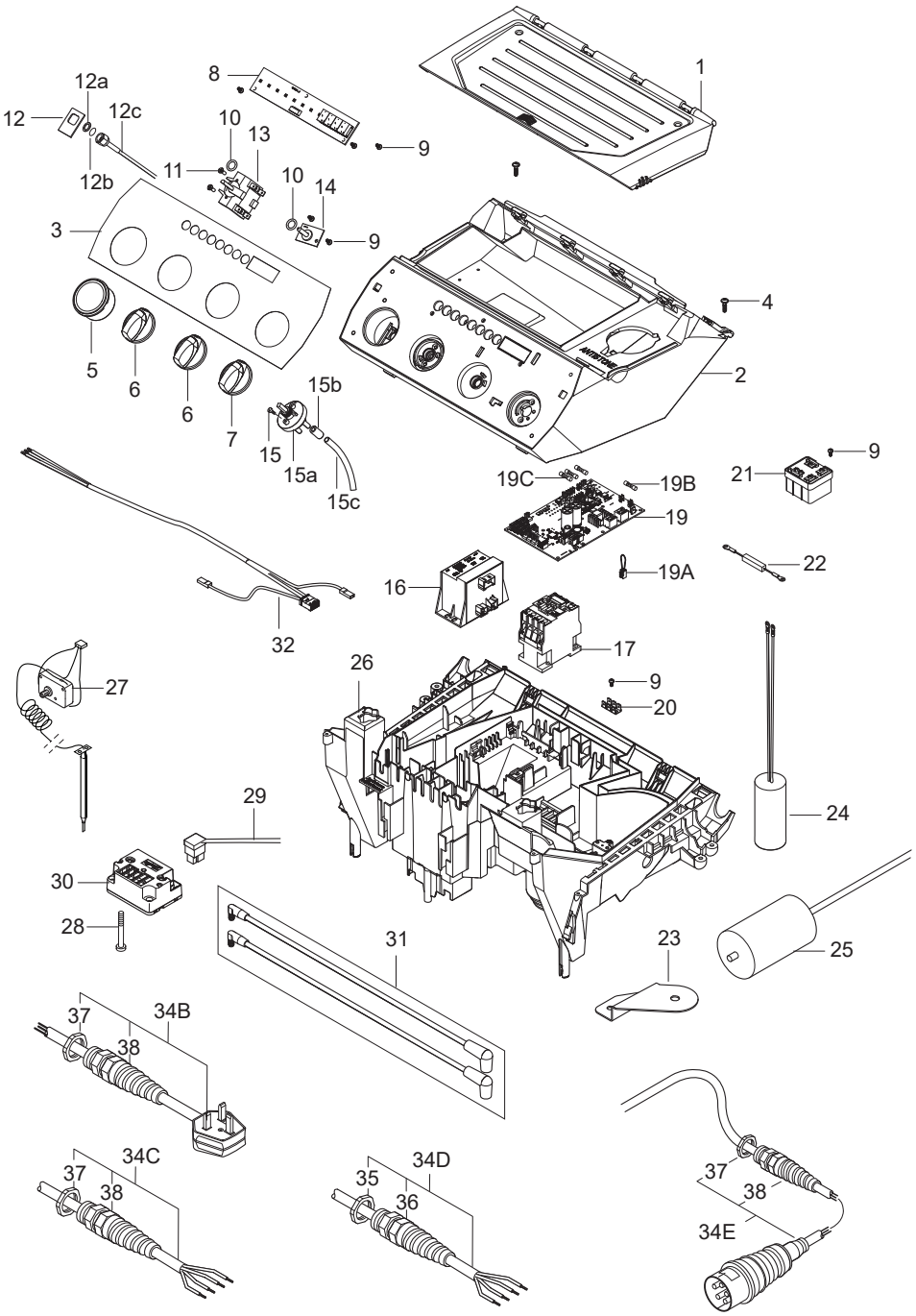
1
2
3
4
5
6
6
7
8
9
9
9
9
10
10
11
12
12a
12b
12c
13
14
15
15a
15b
15c
16
17
19
19A
19B
19C
20
21
22
23
24
25
26
27
28
29
30
31
32
34B
34C
34D
34E
35
36
37
37
37
38
38
38

Pos.	Product no	QTY	Description	Notes
1	107143046	1	TOOL BOX LID	
2	107143045	1	E-BOX TOP	
3	107143153	1	LABEL F. CONTROL PANEL FULL SPEC NILFISK	
4	107141838	2	SCREW K50X18 WN1451 BLACK TORX20	
5	107141648	1	MANOMETER 0-300 BAR	
6	909100204	2	ROTARY KNOB 6x5 ALTO BLUE	
7	909100214	1	ROTARY KNOB GR.1 4KT. 6X6+8X8 BLUE	
8	107143154	1	PCBA NEO UI DISPLAY CPL. MH	
9	909100046	5	SCREW 4X8 WN 1412 STZN	
10	9868	2	O-RING 10.2X2.5 NBR 70SH	
11	18274	2	COUNTERSUNK SCREW M4X12	
12	107141650	1	PLATE FOR MANOMETER	
12a	107141651	1	WASHER M12 13X24X2.5 A2 DIN125	
12b	31000508	1	O-RING NBR	
12c	102406647	1	HOSE F. PRESSURE GAUGE 1050MM	
13	28877	1	SWITCH 10A 400V AC	
14	101117730	1	PCB FOR POTENTIOMETER	
14	107143043	1	CABLE FOR TEMPERATURE ADJUSTMENT	
15	1814730	2	SCREW 35X10B W1423	
15a	301001000	1	VALVE 51X70	
15b	301001906	1	CLOSING CAP D12X21.5	
15c	106408243	1	HOSE 1/4INCH TRANSPARENT - 5 METERS	
16	107143051	1	POWER TRANSFORMER 230/400V 2X24V	
16	107143064	1	POWER TRANSFORMER 220-240V/440-460V	
16	107143068	1	POWER TRANSFORMER 115 / 200V	
17	103822306	1	CONTACTOR CJX2-D18 18A 24V 3P+NO	[1]
17	103822313	1	CONTACTOR CJX2-D25 25A 24V 3P+NO/US	[2]
17	103822317	1	CONTACTOR CJX2-D32 32A 24V 3P+NO	[3]
19	107143151	1	PCBA MH	[4]
19A	101221031	1	JUMPER F. SERVICE TIME RESET	
19B	31001190	1	FUSE 6.3A 5X20 MM 250V	
20	107307326	1	EARTH CONNECTOR 6 PIN	
21	107142761	1	START RELAY RVA4G0C	
22	107141730	1	DISCHARGE RESISTOR 15KOHM/7W	[5]
23	107143134	1	BRACKET FOR CAPACITOR	[5]
24	107143182	1	CAPACITOR 70UF 450/500V RP-3	[6]
25	107141619	1	CAPACITOR 170MF	[5]
26	107143062	1	E-BOX BOTTOM	
27	106268028	1	EXHAUST SAFETY THERMOSTAT KIT	
28	909100149	2	SCREW K50X50 T25 WN1453	
29	107143098	1	PRIMARY CABLE FOR IGNITION COIL	
30	101117759	1	IGNITION TRANSF 220-240 50-60 - DANFOSS	[7]
31	101118220	1	2 X IGNITION CORDS KIT	
32	107143056	1	CABLE FOR POWER TRAFO PRIM 230V	
32	107143063	1	CABLE FOR POWER TRANSFORMER PRIM 400V	
32	107143072	1	CABLE F. POWER TRANSFORMER PRIM 230/400	
34B	101117812	1	POWER C.H07RN 3G1.5 BS13 GDN 6.3X0.8 KIT	[8]
34C	101118182	1	POWER CORD H07RN 4G2.5X6M GND 6.3X0.8 NO	[9]
34D	107143126	1	POWER CORD 4X5.5MM2 X9M	[10]
34E	101118222	1	POWER CORD H07RN 4G1,5 CEE5	[11]
35	909100198	1	SCREWED CABLE GLAND M25X1.5	
36	909100020	1	HEXAGON THIN NUT M25X1.5 EN 50262 PA	
37	909100019	1	HEXAGON THIN NUT M20X1.5 EN 50262 PA	
38	909100043	1	CABLE SCREWING W. ANTIBUC. M20X1.5 D13	

Part Notes:

[1] - MH5M-100/760 UK, MH5M-200/960 EU, MH5M-210/1100 EU,
MH6P-175/1250 EU, MH6M-200/1300 EU, MH7P-180/1260 EU

[2] - MH5M-210/1100 NO, MH7P-180/1260 NO, MH8P-180/2000 EU

[3]	-	MH5M-210/1100 EXP, MH6P-200/1300 NO, MH6P-210/1100 JP, MH6P-210/1300 EXP, MH7P-180/1260 JP
[4]	-	TSB-PPW-2018-014 MH models Software update
		DE TSB-PPW-2018-014 MH-Modele Software Update
[5]	-	1ph
[6]	-	1ph
		TSB-PPW-2018-003 MH_MC change of start relay and run capacitor
		TSB-PPW-2018-003 MH_MC Changement du relais de démarrage et du condensateur de fonctionnement
[7]	-	TSB-PPW-2018-004 Boiler cannot start - no ignition
		FR TSB-PPW-2018-004 Le bruleur ne démarre plus
		DE TSB-PPW-2018-004 Brenner startet nicht - keine Zündung
[8]	-	MH5M-100/760 UK
[9]	-	MH 5M-210/1100 EXP+NO, MH6P-200/1300 EXP+NO, MH7P-180/1260 NO
[10]	-	MH6P-210/1100 JP, MH7P-180-1260 JP
[11]	-	MH5M-200/960 EU, MH5M-210/1100 EU, MH6P-175/1250 EU, MH6P-200/1300 EU, MH7P-180/1260 EU

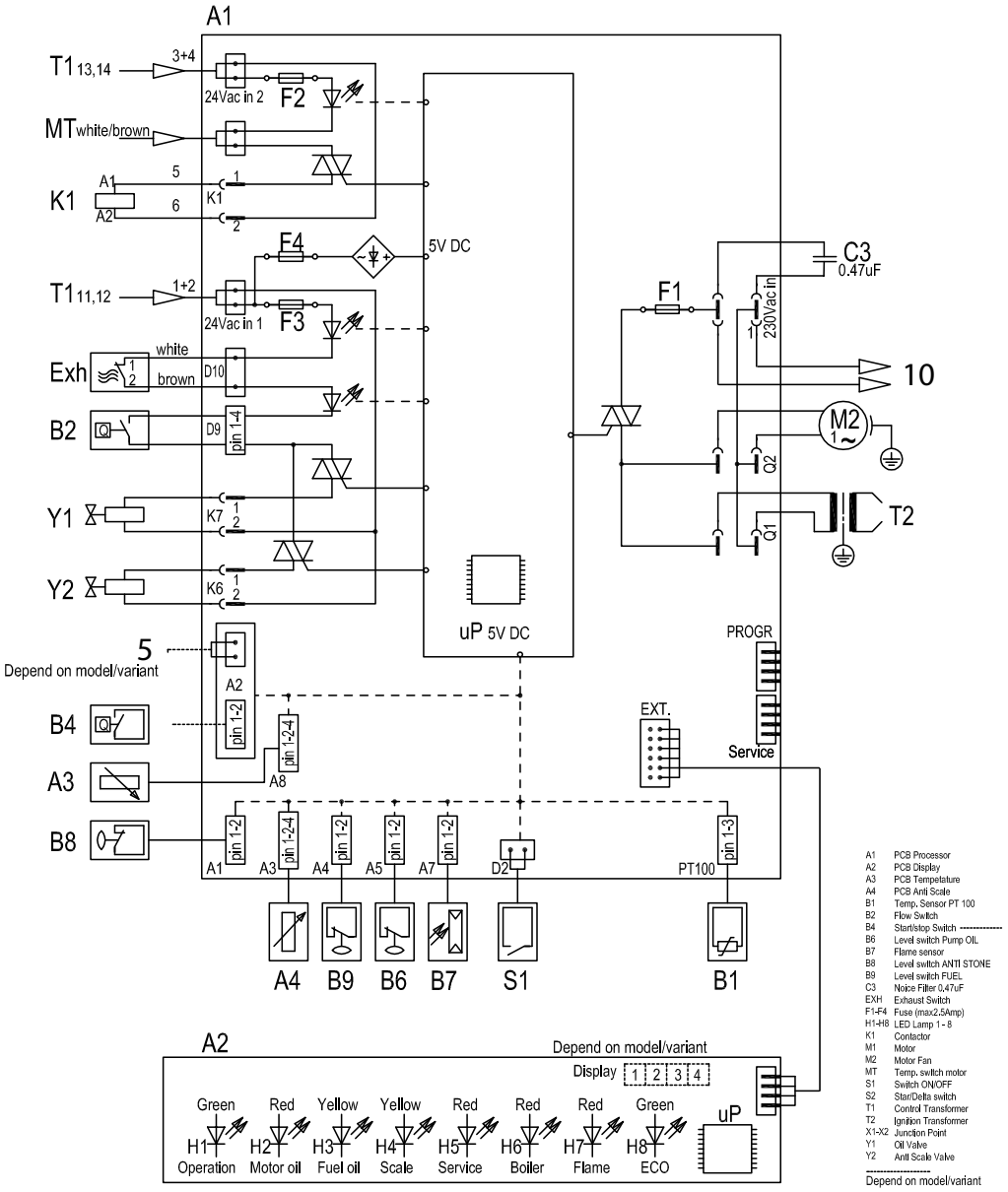
A1
T1 13,14
3+4
24Vac in 2
F2
MT white/brown
K1
A1
A2
5
6
1
2
K1
F4
5V DC
T1 11,12
1+2
24Vac in 1
F3
white
brown
Exh
D10
B2
D9
pin 1-4
Y1
K7
Y2
K6
uP 5V DC
F1
C3
0.47uF
230Vac in
10
M2
1~
Q2
Q1
T2
PROGR
Service
EXT.
5
Depend on model/variant
A2
B4
pin 1-2
pin 1-2-4
A8
A3
B8
pin 1-2
A1
A3
A4
A5
A7
D2
PT100
pin 1-3
A4
B9
B6
B7
S1
B1
A2
Depend on model/variant
Display 1 2 3 4
Green
Red
Yellow
Yellow
Red
Red
Red
Green
H1
H2
H3
H4
H5
H6
H7
H8
Operation
Motor oil
Fuel oil
Scale
Service
Boiler
Flame
ECO
uP
A1 PCB Processor
A2 PCB Display
A3 PCB Temperature
A4 PCB Anti Scale
B1 Temp. Sensor PT 100
B2 Flow Switch
B4 Start/stop Switch ----------
B6 Level switch Pump OIL
B7 Flame sensor
B8 Level switch ANTI STONE
B9 Level switch FUEL
C3 Noice Filter 0,47uF
EXH Exhaust Switch
F1-F4 Fuse (max2.5Amp)
H1-H8 LED Lamp 1 - 8
K1 Contactor
M1 Motor
M2 Motor Fan
MT Temp. switch motor
S1 Switch ON/OFF
S2 Star/Delta switch
T1 Control Transformer
T2 Ignition Transformer
X1-X2 Junction Point
Y1 Oil Valve
Y2 Anti Scale Valve

Depend on model/variant

Pos.	Product no	QTY	Description	Notes
T1	107143052	2	CABLE FOR POWER TRANSFORMER SEC 6X0.75	
MT	107143070	1	CABLE FOR MT	
K1	107143052	1	CABLE FOR POWER TRANSFORMER SEC 6X0.75	
Exh	107143055	1	CABLE FOR HOT WATER MODE AND EXH. SWITCH	
B2	107143121	1	REED SWITCH NO W/CABLE	[1]
Y1	107143095	1	CABLE FOR SOLENOID VALVE 2X0.5	
Y2	107143037	1	DOSING VALVE RPE 24VAC	
5	101118188	1	MICRO-SWITCH KIT	[2]
B4	107143121	1	REED SWITCH NO W/CABLE	[3]
A3	107143043	1	CABLE FOR TEMPERATURE ADJUSTMENT	
B8	101118214	1	FLOAT SWITCH KIT	
A4	107143038	1	CABLE FOR ADJUSTMENT ANTI SCALE	
B9	107143033	1	LEVEL SENSOR FUEL TANK	
B6	101118173	1	OIL SENSOR W/PLUG KIT	[4]
B7	107143100	1	FLAME SENSOR WITH CABLE	
S1	107143055	1	CABLE FOR HOT WATER MODE AND EXH. SWITCH	
B1	107143083	1	TEMPERATUR SENSOR PT100 W/CABLE	
A2	107143053	1	CABLE FOR UI	
T2	107143098	1	PRIMARY CABLE FOR IGNITION COIL	
M2	107143096	1	MOTOR BURNER - 0.23KW/230V/50HZ/1PH	[5]
M2	107143097	1	MOTOR BURNER 390W/200-240V/50/60HZ	[6]
10	107143054	1	WIRE BLACK L=400	
C3	101117867	1	NOISE FILTER KIT	

Part Notes:

[1] - TSB-HPW-2025-003 Reed switch 107143121 torque and packaging

[2] - NA5 PA

[3] - FA
TSB-HPW-2025-003 Reed switch 107143121 torque and packaging

[4] - MI 107309166 JST Connector

[5] - MH 5M-210/1100 FA 400/3/50 Gerni, MH 5M-210/1100 FAX 400-230/3/50 NO, MH 6P-175/1250 FAX 400/3/50 EUMH 6P-200/1300 FAX 400/3/50 EU, MH 7P-180/1260 FA 400/3/50 EU

[6] - MH 5M-210/1100 FA 440-220/3/60 EXPT, MH 6P-210/1100 FA 200/3/50-60 JP, MH 6P-195/1350 FA 440-220/3/60 EXPT, MH 7P-180/1260 FA 200/3/50-60 JP

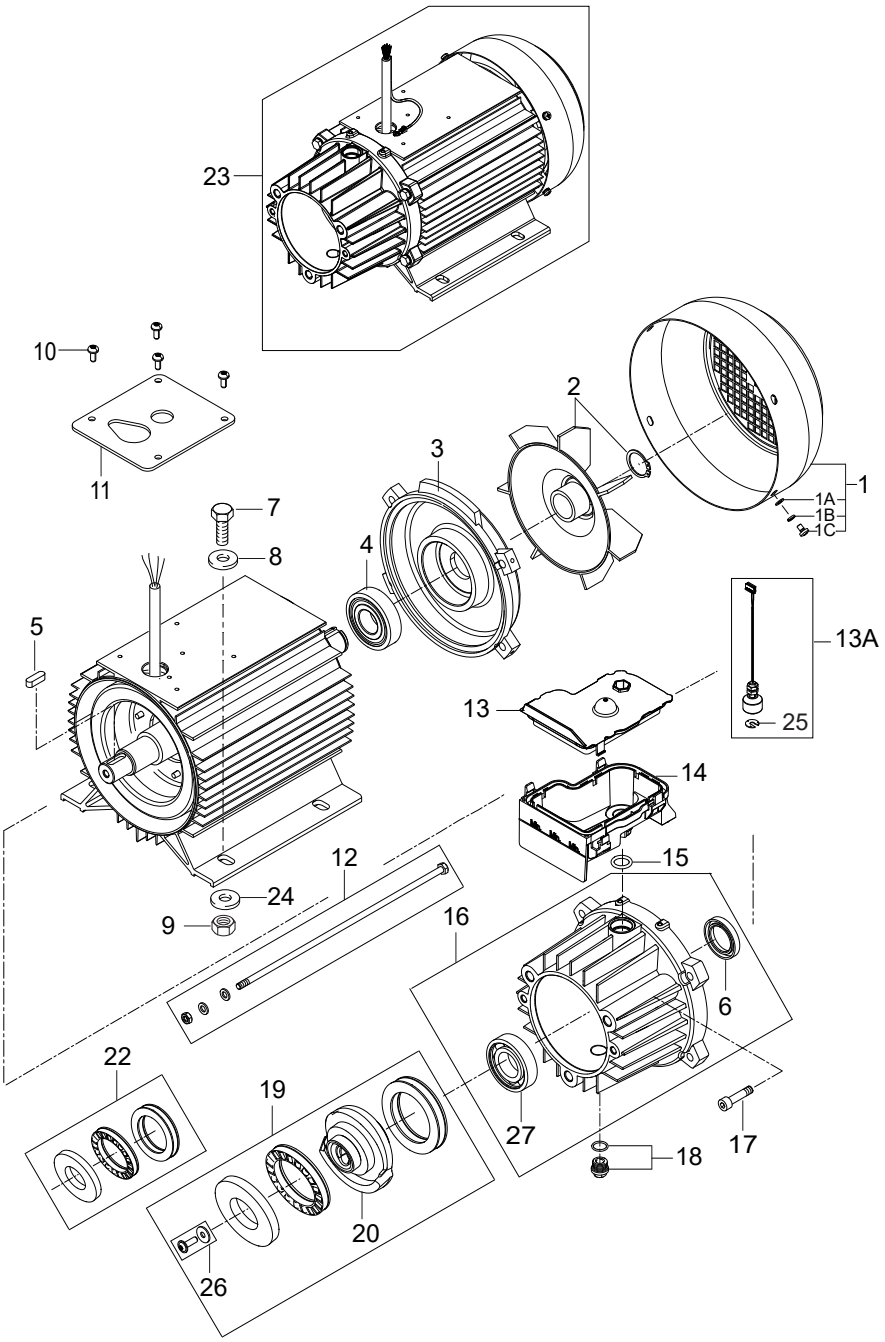
23
10
11
2
3
1
1A
1B
1C
7
8
4
5
13A
13
25
14
15
12
24
9
16
6
22
19
27
18
17
20
26

Pos.	Product no	QTY	Description	Notes
	31001229	1	OIL ISO 150 ALPHASYN-T 20L	
0	5218433	1	PUMP OIL 150 1X1 1L	[1]
1	107144126	1	FAN COVER RF	
1A	2763	4	WASHER 5.3X1	
1B		4	Spring washer Ø5	
1C	1813781	4	SCREW M5X8	
2	107144125	1	FAN W LOCK RING RF	
3	31000148	1	REAR BEARING COVER RF	
4	31000149	1	REAR BEARING 6306 2Z C3 150 DEGREES RF	
5	19639	1	PARALLEL KEY 8X7X25 A DIN 6885 ST	
6	G120414	1	OIL SEALING RING Ø30XØ47X7	
7	1801133	4	SCREW M10X25 ISO4017 ZN	
8	2767	4	WASHER 10.5 X 20 X 2	
9	8952	4	HEX M10 LOCK NUT NYLON INSERT ISO 10511	
10	107140881	4	SCREW M5X12 DIN 7985 TORX	
11	107140875	1	SEALING BETWEEN E-BOX AND MPU	[2]
12	31000505	1	STAY BOLT M8X290 RF	
12	31000504	1	STAY BOLT M8X265 RF	
13	107140877	1	OIL CONTAINER TOP	
13A	101118173	1	OIL SENSOR W/PLUG KIT	
14	107143094	1	OIL CONTAINER BOTTOM	
15	107140882	1	O-RING 15.0 X 3.0 SMS 1586 NBR70	
16	107141967	1	D-BEARING COVER COMPLETE NA5.2	
17	107144142	4	SCREW KIT PUMP NA5	
18	107141982	1	OIL PLUG W/O-RING AND MAGNET NA5.2	
19	101118248	1	WOBBLE DISC 7.74 DEG. BEARING KIT NA5.2	[3]
19	101118243	1	WOBBLE DISC 10.2 DEG. BEARING KIT NA5.2	[4]
19	101118241	1	WOBBLE DISC 12 DEG. BEARING KIT NA5.2	[5]
20	107141990	1	WOBBLE DISC 7.74 DEG. NA5.2	[3]
20	107141964	1	WOBBLE DISC 10.2 DEG. NA5.2	[4]
20	107141966	1	WOBBLE DISC 12 DEG. NA5.2	[5]
22	101118240	1	BEARING KIT FA & PA - NA5.2	
23	107141956	1	MOTOR 2.2 KW/230/1 50HZ	[6]
23	107141954	1	MOTOR 5.5 KW 220/230-400/440/3/50/60 EU	[7]
23	107141953	1	MOTOR 6.7KW 220-440/230-400/3 50/60HZ-EU	[8]
24	4827	4	WASHER 10.5X2.5	
25	107142593	1	HOLDING WASHER PE	
26	107142658	1	NA5.2 WD SCREW AND WASHER	
27	107144817	1	BEARING KBC 6206 GB/T818	
	101118265	1	MPU NA5.2 PA 6.7KW/400V/50HZ/3PH/12DEG	[9]

Part Notes:

[1] - 0,71L - OIL TYPES_QUANTITY for HPW_APRIL 2017

[2] - TSB-PPW-2018-012 NA5_NA6 mpu. Water enters into the stator.

[3] - Machine no. 107146941 MH 5M-100/760, 107146942 MH 5M-100/760

[4] - Machine no. 107146947 MH 5M-200/960, 107146948 MH 5M-200/960, 107146956 MH 5M-210/1100 EXP, 107146944 MH 5M-3000/4,8

[5] - Machine no. 107146950 MH 5M-210/1100, 107146953 MH 5M-210/1100, 107146959 MH 5M-210/1100, 107146949 MH 5M-210/1100, 107146954 MH 5M-210/1100

[6] - MH5M-100/760 UK
Also order Gasket for motor, 107140875

[7] - MH5M-200/960 EU
Also order Gasket for motor, 107140875

[8] - MH5M-210/1100 EU+NO+Gerni+EXP
Also order Gasket for motor, 107140875

[9] - MH 5M-210/1100 PAX 400/3/50 EU

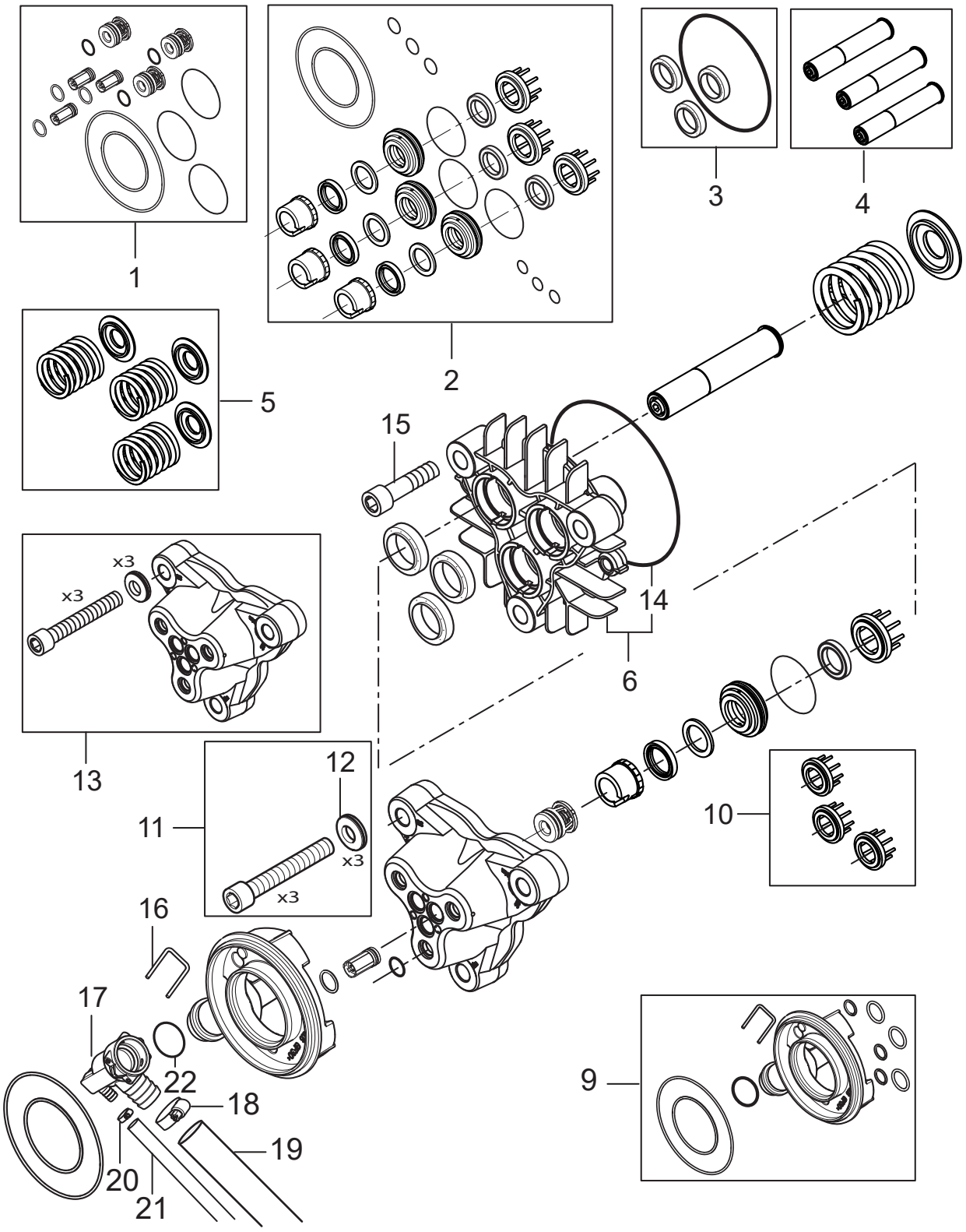
1
2
3
4
5
15
x3
x3
14
6
13
12
11
x3
x3
10
16
17
22
18
19
20
21
9

Pos.	Product no	QTY	Description	Notes
1	101118121	1	VALVE KIT - NA5	
2	101118323	1	WATER SEAL KIT NA5	[1]
3	107144102	1	OIL SEAL KIT - NA5	
4	101118239	1	PISTON KIT - NA5.2	
5	107144104	1	SPRING KIT - NA5	
6	107141983	1	CYLINDER BLOCK W/ O-RING NA5.2	
9	101118147	1	INLET MANIFOLD KIT NA5	
10	107140919	1	SUPPORT RING NA5 SPARE VPE 3	
11	107141968	1	CYL.SCREW M12X80 WITH NORDLOCK WASHER	
12	107141969	3	WASHER NLX12SP D12.5XD25.4X4.2MM	
13	107141985	1	CYLINDER HEAD NA5.2 W. SCREWS & WASHERS	
14	107141512	1	O-RING D114 X D1.78 NBR 72	
15	4042	2	CYLINDER SCREW M8X40 ISO 4762 8.8 ZN	
16	107143085	1	LOCK PIN	
17	107143092	1	WATER LIMITER (SMALL)	[2]
17	107143000	1	WATER LIMITER (MEDIUM)	[3]
17	107143142	1	WATER LIMITER L	[4]
18	8298	2	HOSE CLIP 16-27	
19	107143031	1	FUELFLEX HOSE D28/D20 10BAR/20°	
20	11654	1	HOSE CLAMP Ø11.5	
21	106408243	1	HOSE 1/4INCH TRANSPARENT - 5 METERS	
22	107143088	1	O-RING 18.72X2.62	

Part Notes:

[1] - TSB-PPW-2020-003 NA5 pump THRUST COLLAR changed

DE TSB-PPW-2020-003 NA5 Pumpe - Änderung der Druckringe

TSB-PPW-2020-003 Nouvelles bagues laiton pour pompe NA5

[2] - MH5M-100/760 UK

[3] - MH5M-200/960 EU

[4] - MH 5M-210/1100

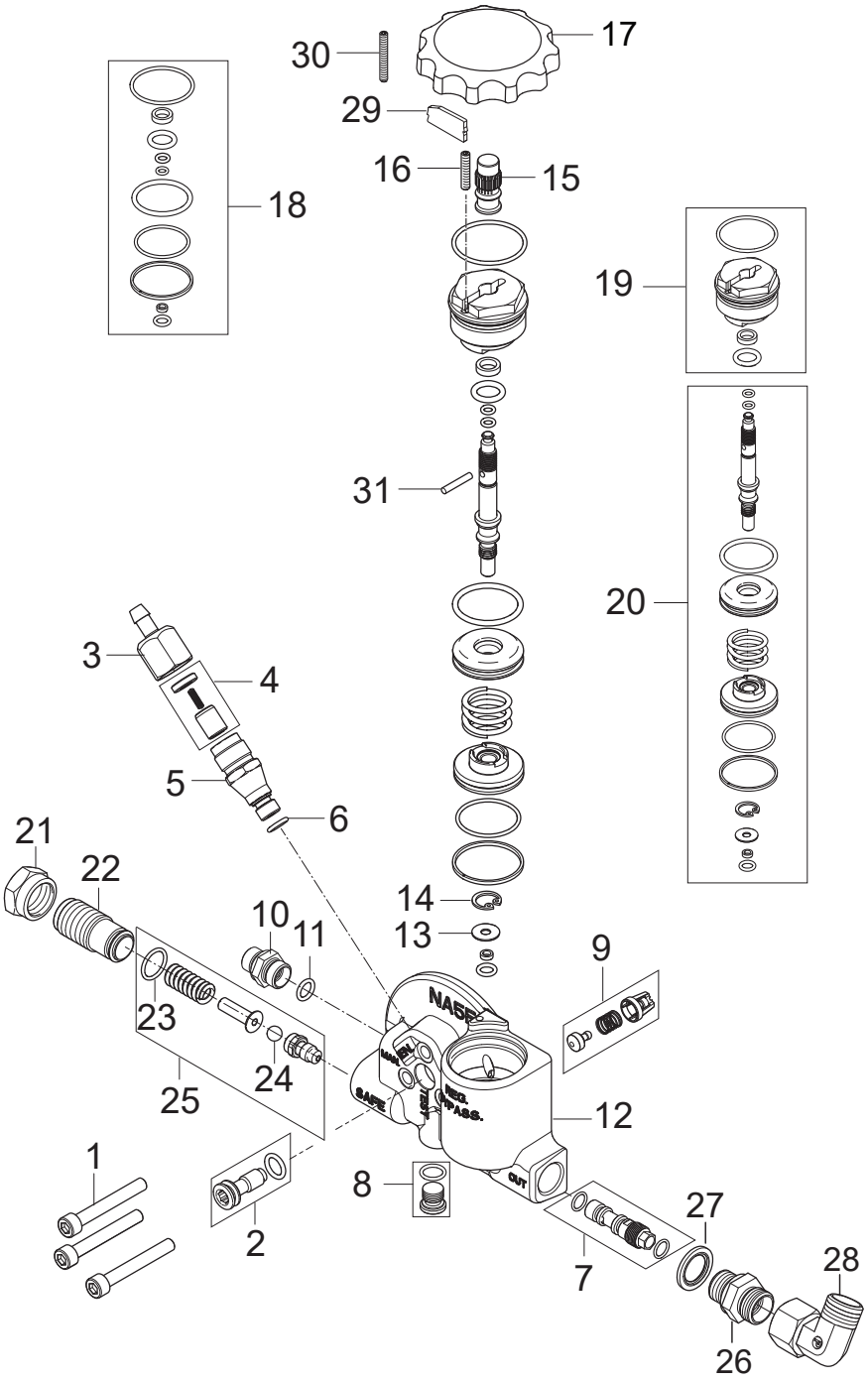
30
17
29
16
15
18
19
31
20
3
4
5
6
21
22
14
13
10
11
9
23
24
25
12
1
8
2
27
7
28
26
NASF
SAFE
REG.
OUT

Pos.	Product no	QTY	Description	Notes
1	5100	3	SCREW M6X45 ISO 4762	
	107144142	1	SCREW KIT PUMP NA5	[1]
2	107144137	1	UNLOADER PLUG NA5	
3	6221529	1	COVER FOR VALVE HOUSING	
4	101118183	1	PISTON KIT FOR VENTING VALVE	
5	101117890	1	HOUSING FOR VENTING VALVE	
6	3001740	1	O-RING 7.66X1.78 NBR 70SH	
7	107144112	1	VENTURI TUBE D2.03 NATURE	
8	101117924	1	PLUG FOR MPU 1/8	
9	101118184	1	RETURN VALVE BY-PASS - KIT MH	[2]
10	1821	1	FITTING XGE 6LR1/8	
11	3001740	1	O-RING 7.66X1.78 NBR 70SH	
12	107143111	1	NA5 FA BYPASS VALVE MACHINED	
13	106408196	1	WASHER D12.95 X D4.6 X 0.9 BRASS	
14	106408195	1	RETAINING RING SIZE 13 DIN472	
15	106408189	1	NUT M8 X 1 FOR UNLOADER VALVE FA	
16	107146563	1	SCREW POINTED DIN 913 M4X16 FZG	
17	107143003	1	REGULATOR KNOB NA5/NA6 NILFISK	
18	101118050	1	SEALING KIT FOR NA6	
19	101118051	1	PLUG FOR UNLOADER VALVE FA - KIT NA6	
20	101118117	1	CONTROL UNIT - KIT NA5	
21	6100928	1	LOCK NUT	
22	6100940	1	ADJUSTMENT SCREW, 250 BAR	
23	3001070	1	O-RING 13.1X1.6 NBR 90SH	
24	1802644	1	BALL Ø7 G40 WKS 1.4034	
25	101118118	1	OPENING VALVE REP. KIT NA5 NA6 FA	
26	1601079	1	THREADED CONNECTION	
27	1801075	1	PACK.RING D23.8XD14.96 3/8NBR SELF-CENT.	
28	101118094	1	COUPLING KIT 90D ISO 8434 M18X1.5 THREAD	
29	107143005	1	PLATE FOR REG. KNOB	
30	107146562	1	SCREW M4X30 POINTED DIN 413	
31	107146561	1	PIN DIA 3 X 18MM STAINLESS STEEL	

Part Notes:

[1] - 3x Screw HX M6 x 45 ISO 4762
2x CYLINDRICAL SCREW M6 X 18
2x Screw M8x 40 ISO4762 8.8 zn
4x SCREW M8X35 ISO 4017

[2] - Spring included: OD8,45 x L16,5 x d0,7

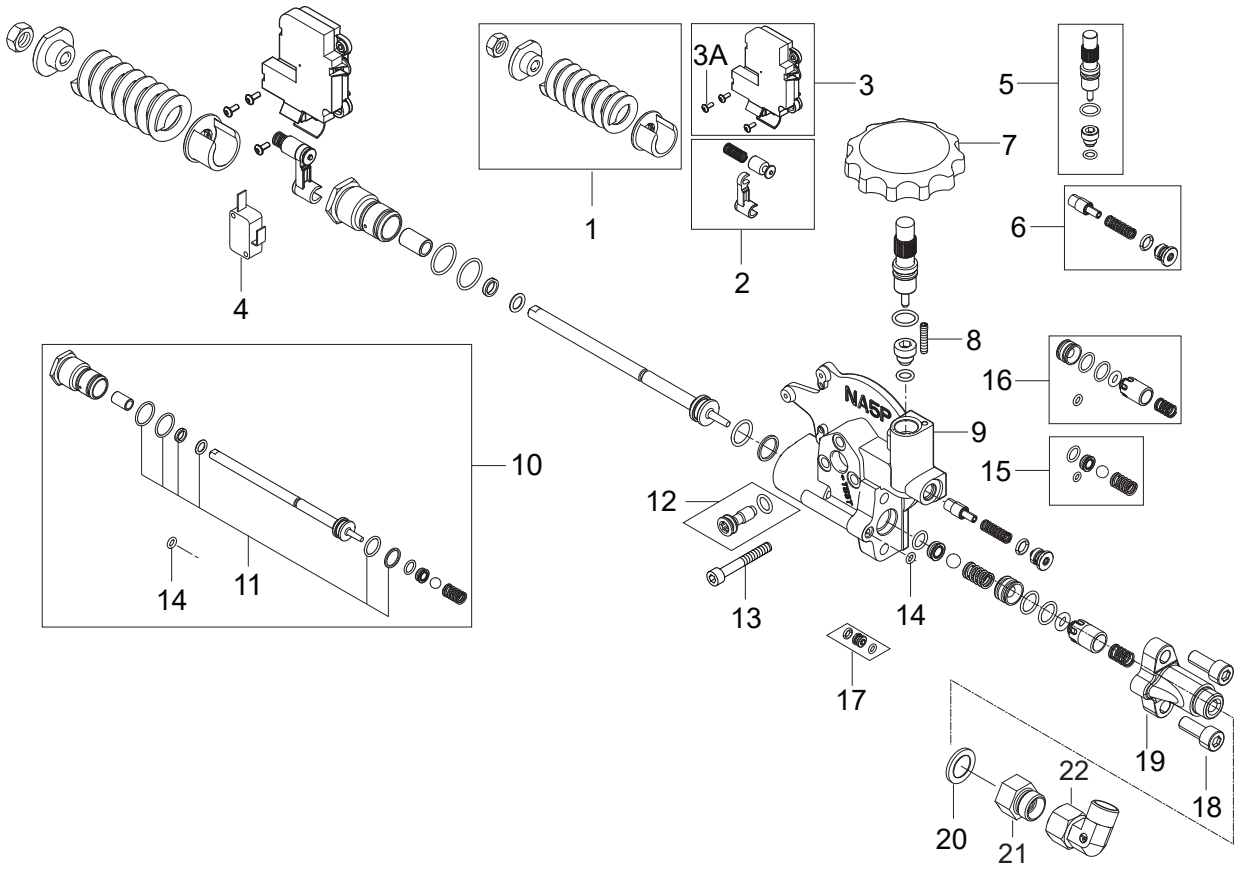
1
2
3
3A
4
5
6
7
8
9
10
11
12
13
14
14
15
16
17
18
19
20
21
22
NASP

Pos.	Product no	QTY	Description	Notes
1	101118091	1	UNLOADER SPRING REP. KIT-PAINTED NA5 PA	
2	101118090	1	MICROSW. ACTIVATION REP. KIT NA5 PA	
3	101118084	1	MICROSWITCH BOX W/O MICROSW. NA5 PA	
3A	107141515	3	SCREW M3X8 ISO7380 FZG TORX 10	
4	101118188	1	MICRO-SWITCH KIT	
5	101118313	1	FLOW REGULATION VALVE KIT	[1]
6	101118315	1	PRESSURE BUILD UP VALVE LOW FLOW KIT	[2]
6	101118314	1	PRESSURE BUILD UP VALVE HIGH FLOW KIT	[3]
7	107143003	1	REGULATOR KNOB NA5/NA6 NILFISK	
8	106408188	1	SCREW M4X20 POINTED DIN 913	
9	107140884	1	UNLOADER PA NA5	[1]
10	101118294	1	STEM + SEALING REP. KIT NA5/5.2/6/6+ PA	[4]
11	101118083	1	SEAL KIT FOR STEM FOR NA5 PA	
12	107144137	1	UNLOADER PLUG NA5	
13	5100	3	SCREW M6X45 ISO 4762	
13	107144142	1	SCREW KIT PUMP NA5	[5]
14	107141514	1	O-RING D4 X D1.5 NBR 90	
15	101118295	1	BYPASS VALVE REP. KIT NA5.2 PA	[4]
16	101118254	1	HOLDING PRESSURE VALVE REP. KIT NA5.2 PA	[4]
17	101118316	1	DAMPER SEAT WITH O-RING KIT	[1]
18	8894	2	SCREW DIN 912 M8 X 20 8.8 FZB	
19	107143110	1	NA5 PA OUTLET MACHINED	
20	107143107	1	PACKING RING D23.8XD17.28X2	
21	107143090	1	ADAPTOR IN 3/8 OUT M18X1.5	
22	101118094	1	COUPLING KIT 90D ISO 8434 M18X1.5 THREAD	

Part Notes:

[1] - TSB-PPW-2020-001 MH 4_MH 5M Damper Valve removed

DE TSB-PPW-2020-001 MH 4 MH 5M Dämpferkolben entfernt

TSB-PPW-2020-001 MH 4M5M_ MC 5M machine en version PA. Supression de l'anti bélier

[2] - MH 5M-100/760

TSB-PPW-2020-001 MH 4_MH 5M Damper Valve removed

DE TSB-PPW-2020-001 MH 4 MH 5M Dämpferkolben entfernt

TSB-PPW-2020-001 MH 4M5M_ MC 5M machine en version PA. Supression de l'anti bélier

[3] - MH 5M-210/1100

TSB-PPW-2020-001 MH 4_MH 5M Damper Valve removed

DE TSB-PPW-2020-001 MH 4 MH 5M Dämpferkolben entfernt

TSB-PPW-2020-001 MH 4M5M_ MC 5M machine en version PA. Supression de l'anti bélier

[4] - TSB-PPW-2017-005 Low pressure—Unloader valve for NA5.2 pump can leak internally

[5] - 3x Screw HX M6 x 45 ISO 4762

2x CYLINDRICAL SCREW M6 X 18

2x Screw M8x 40 ISO4762 8.8 zn

4x SCREW M8X35 ISO 4017

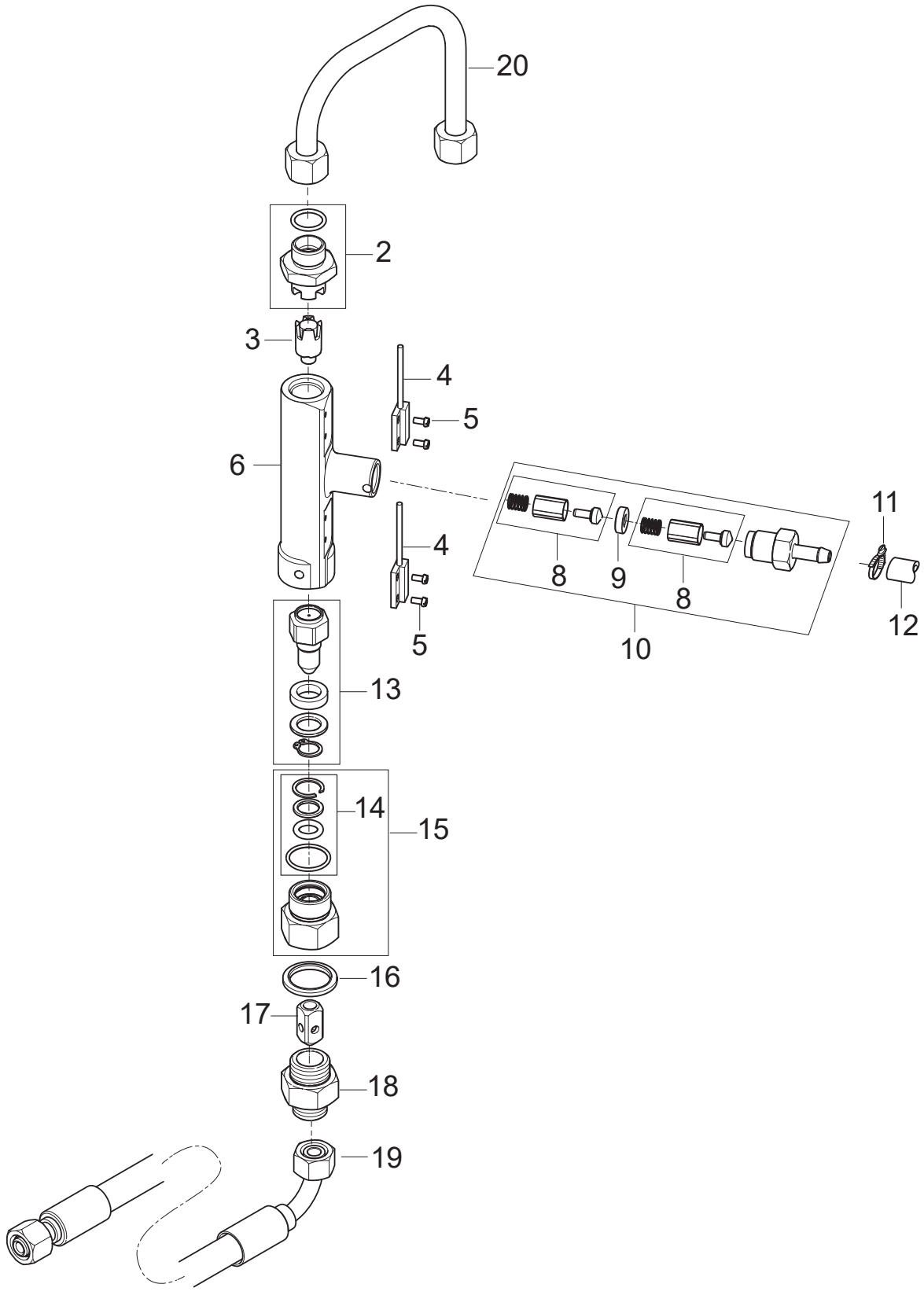
20
2
3
4
5
6
4
5
8
9
8
10
11
12
13
14
15
16
17
18
19

Pos.	Product no	QTY	Description	Notes
2	101118190	1	MALE STUD M18X1.5 KIT	
3	101118055	1	MAGNET AND HOUSE FOR FLOW SWITCH-KIT NA6	
4	107143121	2	REED SWITCH NO W/CABLE	[1]
5	101118033	4	SCREW M3X6 BRASS DIN 84 ISO 1207 KIT	
6	101118308	1	FLOW CONTROL HOUSING FA	
8	1119566	2	NON RETURN VALVE REP.KIT	
9	6201535	1	SEAT	
10	1119318	1	NON RETURN VALVE REP.KIT	
11	11654	2	HOSE CLAMP Ø11.5	
12	101406100	0.92	HOSE DN 6X3 5M	
13	101117896	1	NON RETURN VALVE W/MAGNET	[2]
14	101118191	1	SEALING KIT FOR MALE STUD	
15	101118230	1	MALE STUD F.NON-RET.VALVE 1/2"-M22X1–KIT	
16	1807932	1	SELF-SEALING WASHER	
17	6101038	1	PISTON	
18	107143155	1	PISTON HOUSING 1/2" - M18X1.5	
19	107143171	1	HP HOSE DN10 505 DKL-DKL 90D	[3]
20	107143188	1	PIPE FLOW CONTROL NA5/6 / B5	[4]
19+20	101118322	1	HP HOSE AND CONNECTION PIPE NA6/B5 KIT	

Part Notes:

[1] - TSB-HPW-2025-003 Reed switch 107143121 torque and packaging

[2] - TSB-PPW-2016-012 MH 4M FA None return valve 101117896 get stocked

DE TSB-PPW-2016-012 MH 4M FA Strömungskolben 101117896 blockiert

[3] - MH5, MH 6P-175/1250, MH 6P-210/1100

[4] - MH5, MH 6P

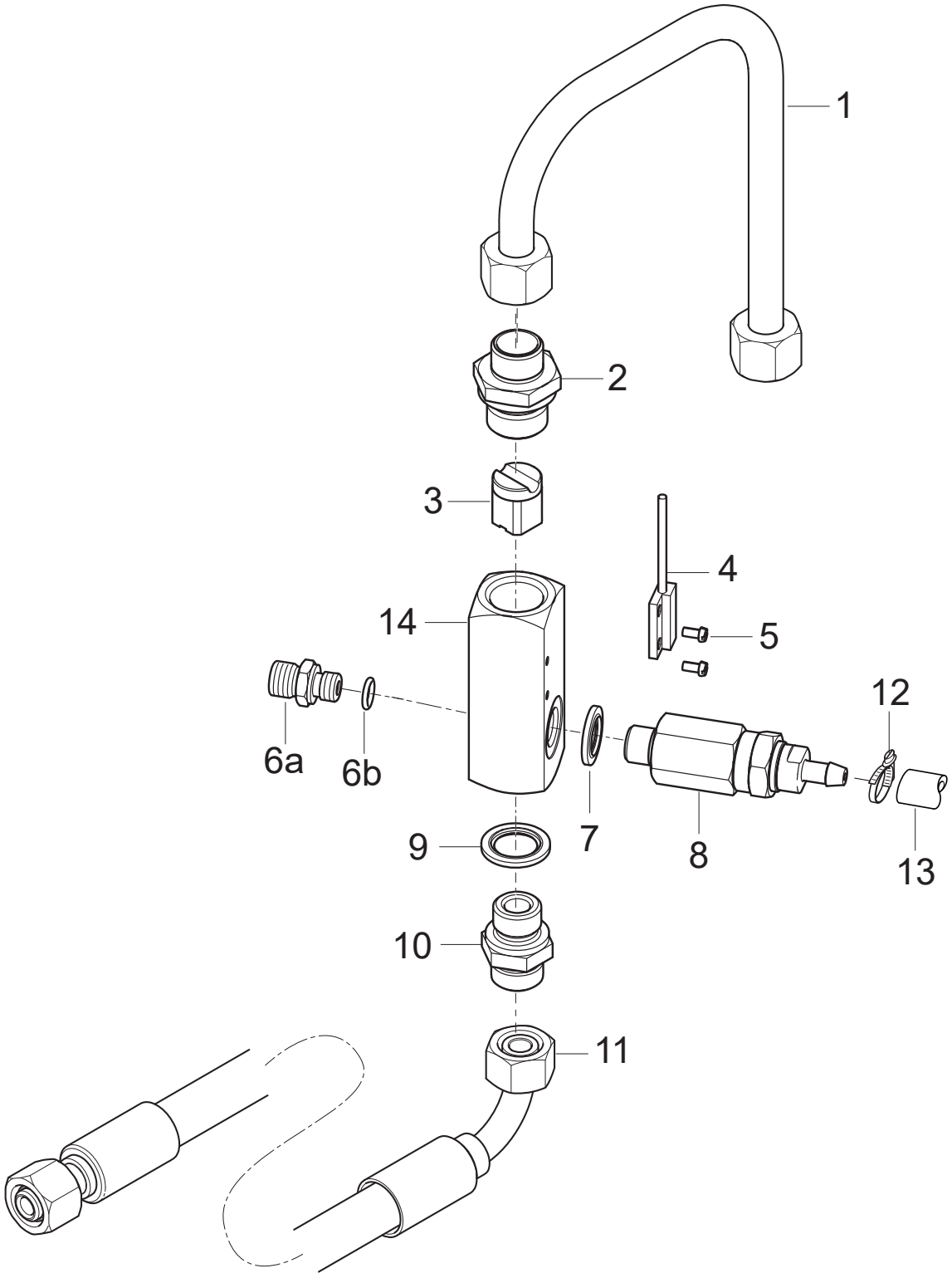
1
2
3
4
5
14
6a
6b
12
13
7
8
9
10
11

mai

Pos.	Product no	QTY	Description	Notes
1	107143187	1	PIPE FLOW CONTROL NA5 PA/B5	
1+11	101118321	1	HP HOSE AND CONNECTION PIPE NA5 PA/B5	
2	107143122	1	THREADED CONNECTION D12X1/2 INCH	
3	101117798	1	MAGNET HOUSING CPL. KIT	
4	107143121	1	REED SWITCH NO W/CABLE	[1]
5	101118033	2	SCREW M3X6 BRASS DIN 84 ISO 1207 KIT	
6a	1821	1	FITTING XGE 6LR1/8	
6b	3001740	1	O-RING 7.66X1.78 NBR 70SH	
7	1803493	1	PACKING RING Ø 20.57X Ø 13	
8	101118290	1	OPENING PRESSURE VALVE 146 BAR KIT	[2]
8	101118292	1	OPENING PRESSURE VALVE 250 BAR KIT	[3]
9	1801075	1	PACK.RING D23.8XD14.96 3/8NBR SELF-CENT.	
10	1601079	1	THREADED CONNECTION	
11	107143171	1	HP HOSE DN10 505 DKL-DKL 90D	
12	11654	2	HOSE CLAMP Ø11.5	
13	101406100	1	HOSE DN 6X3 5M	
14	101118306	1	FLOW CONTROL HOUSING PA	

Part Notes:

[1] - TSB-HPW-2025-003 Reed switch 107143121 torque and packaging
[2] - MH 5M-100/760 PA
[3] - MH 5M-210/1100 PA

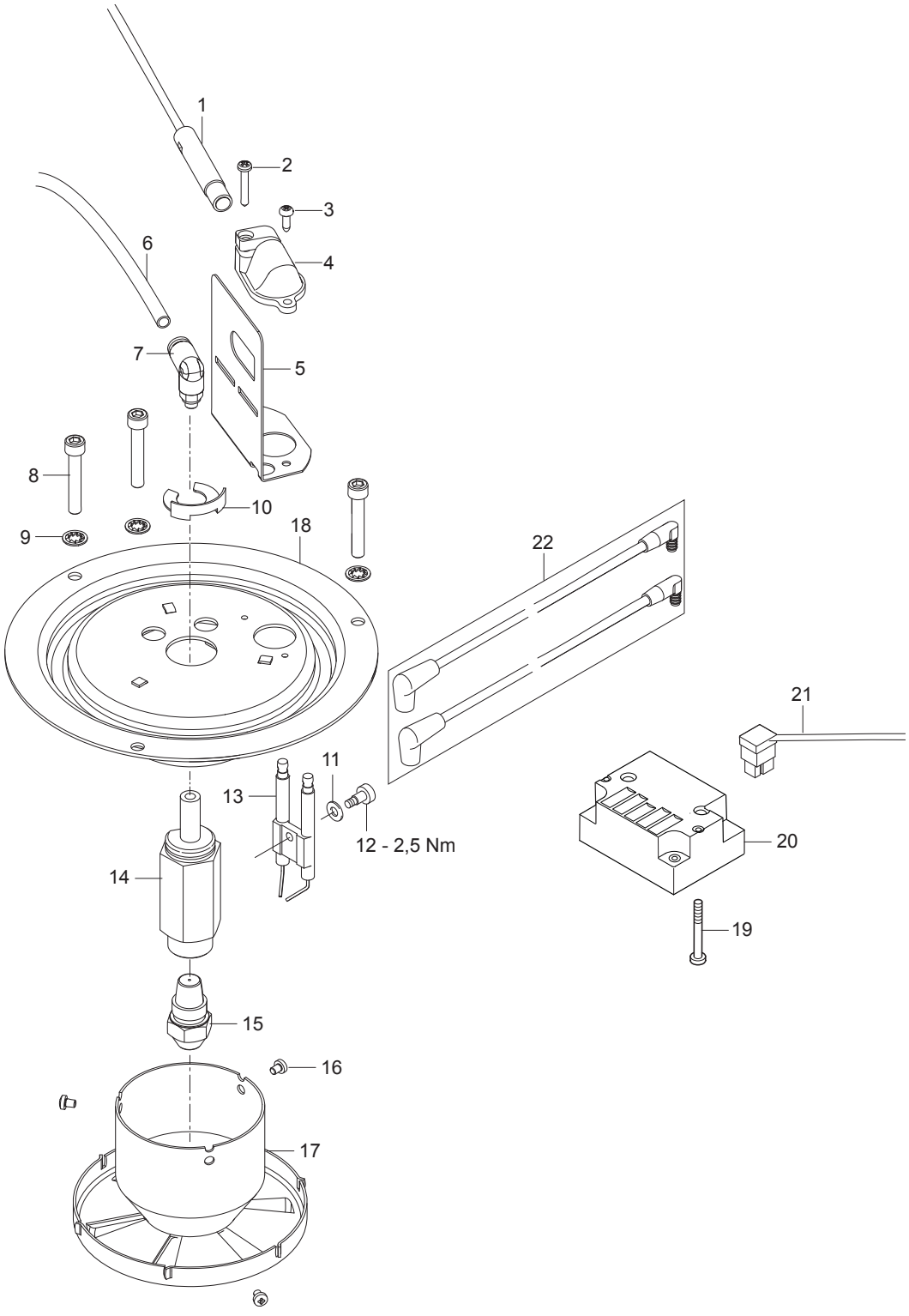
1
2
3
4
5
6
7
8
9
10
11
12 - 2,5 Nm
13
14
15
16
17
18
19
20
21
22

Pos.	Product no	QTY	Description	Notes
1	107143100	1	FLAME SENSOR WITH CABLE	
2	5606	1	SCREW 2.9X19	
3	4036	1	SHEET METAL SCREW 2.9X9	
4	301000934	1	HOLDER FLAMESENSOR	
5	107143101	1	SHIELD FOR FLAME SENSOR	
6	909100141	1	PIPE Ø4X1 DIN 73378 MEWA PA	
7	101117913	1	ELBOW 4/M5 PUSH-IN	
8	3873	3	SCREW M5X30	
9	3376	3	SERRATED LOCK WASHER D5.3 A2 DIN 6798A	
10	101117876	1	CIRCLIPS	
11	909100144	1	SPRING WASHER B5	
12	909100143	1	PAN HEAD SCREW M4X 4.5	
13	301150009	1	IGNITION ELECTRODE KIT	
14	101117915	1	OIL NOZZLE HOLDER	
15	301000886	1	OIL NOZZLE H 1.75 GAL/H 6.55 KG/H 60 DEG	
16	51848	3	OVAL HEAD SCREW M3X4	
17	301001834	1	AIR DISTRIBUTOR D94X59.2	
18	301000606	1	COVER D150X38	[1]
19	909100149	2	SCREW K50X50 T25 WN1453	
20	101117759	1	IGNITION TRANSF 220-240 50-60 - DANFOSS	[2]
21	107143098	1	PRIMARY CABLE FOR IGNITION COIL	
22	101118220	1	2 X IGNITION CORDS KIT	

Part Notes:

[1] - MH5, MH6, MH7, MH8

[2] - TSB-PPW-2018-004 Boiler cannot start - no ignition

FR TSB-PPW-2018-004 Le bruleur ne démarre plus

DE TSB-PPW-2018-004 Brenner startet nicht - keine Zündung

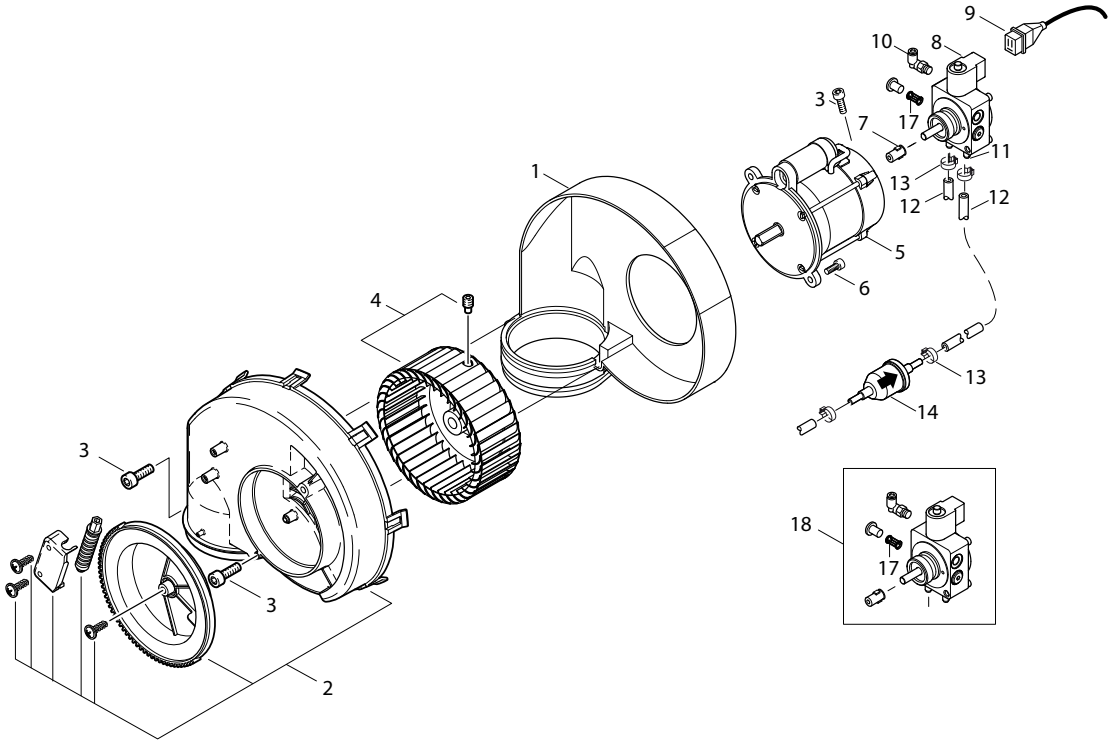
9
10
8
3
7
17
11
13
12
12
1
5
6
4
13
14
3
18
17
3
2

Pos.	Product no	QTY	Description	Notes
1	301000495	1	FAN HOUSE	
2	301000852	1	COVER FOR FAN HOUSING	
3	32535	3	SCREW M5X16	
4	301000889	1	FAN WHEEL D160X60 ART.NO.	
4	301002126	1	FAN WHEEL	[1]
5	107143179	1	MOTOR BURNER 350W/110-120V/50/60HZ	[2]
5	107143096	1	MOTOR BURNER - 0.23KW/230V/50HZ/1PH	
5	107143097	1	MOTOR BURNER 390W/200-240V/50/60HZ	[1]
6	4697	2	SCREW M6X16	
7	101117707	1	COUPLING FOR OIL PUMP BFA 01 L3L	
8	3821089	1	COIL WITH NUT AND WASHER	
9	107143095	1	CABLE FOR SOLENOID VALVE 2X0.5	
10	101117706	1	PUSH-IN ANGLE FITTING	
11	101117777	1	HOSE CONNECTIONS FOR OIL PUMP BFA 01 L3	
12	106408244	1	HOSE D6X2.5 - 5 METERS	
13	301001133	2	HOSE CLAMP 10/7	
14	301002926	1	INLINE FILTER 101X36.5X6 KU	
17	31001081	1	FILTER FOR OIL PUMP	
18	101117673	1	OIL PUMP INCL. FITTINGS	

Part Notes:

[1] - JP, EXPT
[2] - MH 3C

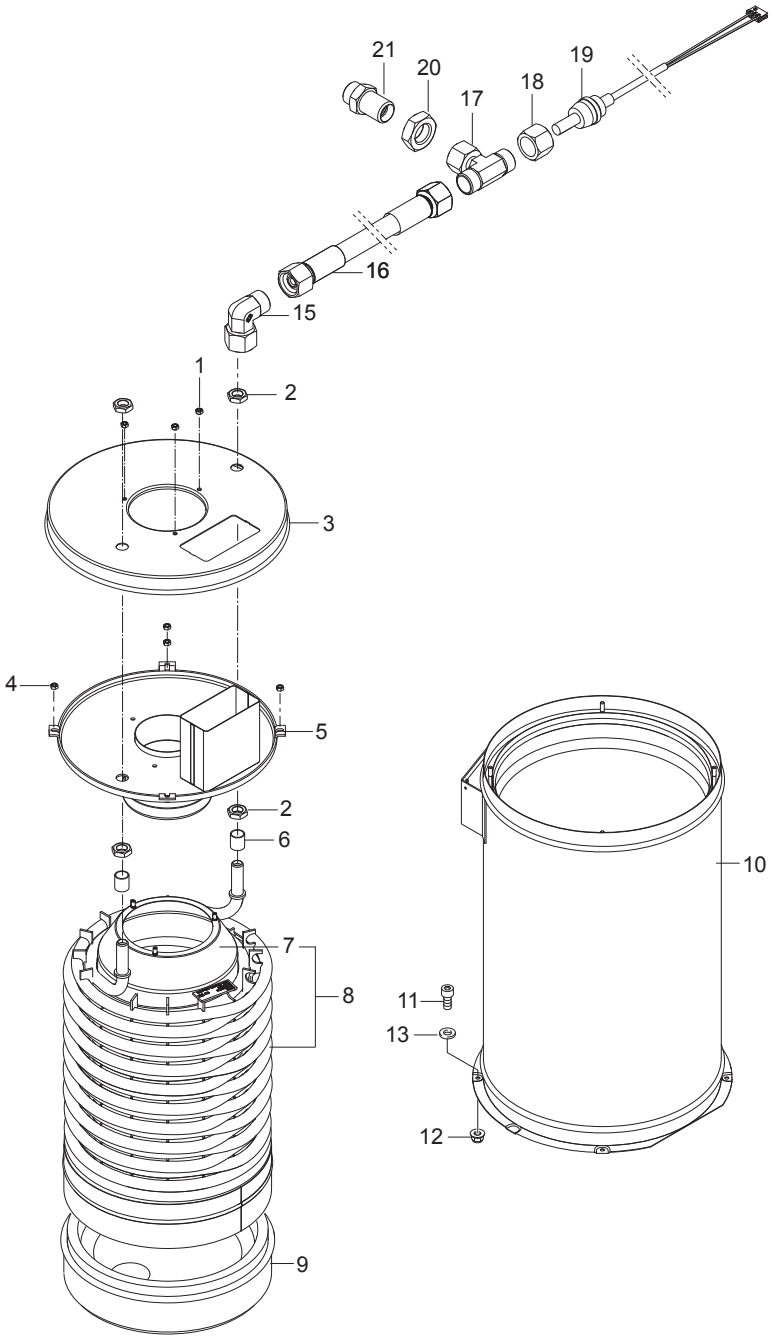
21
20
17
18
19
16
15
1
2
3
4
5
2
6
7
8
9
10
11
13
12

Pos.	Product no	QTY	Description	Notes
1	3136	3	HEXAGON NUT M6	
2	7012	4	HEXAGON NUT M18X1.5	
3	31001162	1	OUTER BOILER TOP B5 - B7	
4	12263	4	HEXAGON NUT M6	
5	31001163	1	INSIDE BOILER TOP CPL B5	
6	301000582	2	BUSHING Ø22X1.5X24	
7	301000541	1	SHIELDING CONE	
8	31001164	1	COIL WELDED B5	
8	107143301	1	COIL B5 SS, MH	[1]
9	301000916	1	INSULATION Ø320.5X89	[2]
10	31001165	1	BOILER JACKET B5	
11	4697	2	SCREW M6X16	
12	11619	2	LOCK NUT M6 - 8 A2K DIN985	
13	107143146	2	WASHER SERRATED M6	
15	101118094	1	COUPLING KIT 90D ISO 8434 M18X1.5 THREAD	
16	107143147	1	HP HOSE DN10 560 DKL-DKL	
17	101118093	1	T-FITTING M18 X 1.5 THREAD	
18	1081	1	UNION NUT L12 DIN 3870-A ST/ZN	
19	107143083	1	TEMPERATUR SENSOR PT100 W/CABLE	
20	1803220	1	HEXAGON NUT M18X1.5 ISO 8675 ZN	
21	107143082	1	OUTLET FITTING	

Part Notes:

[1] - TSB-PPW-2017-011 Stainless Steel heat exchangers new stay material and new spare part numbers

[2] - TSB-HPW-2021-002 Chamotte stones in insulation removed

© 2023 - Nilfisk A/S