KÄRCHER

SPARE PARTS LIST

HDS 745/895 CB

9.532-644

9.532-646

05.04

ALWAYS USE KARCHER RECOMMENDED SPARE PARTS

PUMP SET - PISTON

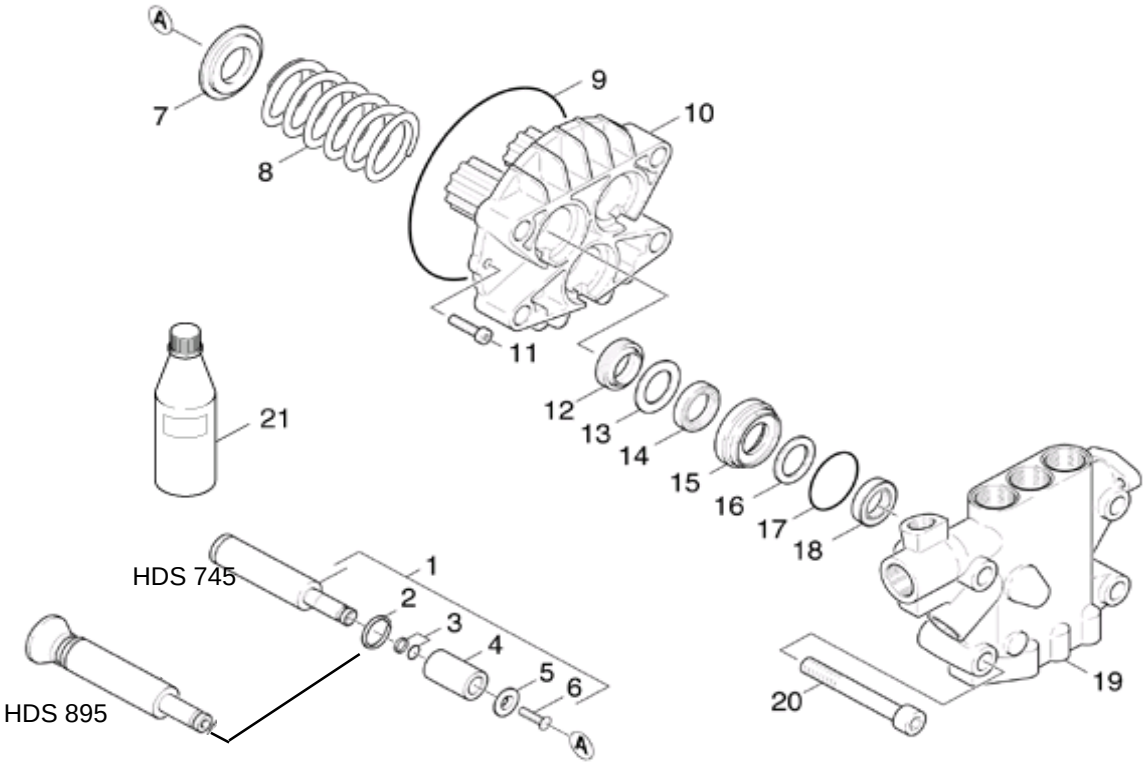

Pos.	Description	Part No. (HDS 745)	Part No. (HDS 895)	Qty.
1	PISTON	4.553-150.0	4.553-135.0	3
2	SPRING RING	6.472-331.0	6.472-142.0	3
3	GASKET	6.362-365.0	6.362-365.0	3
4	CERAMIC POD	5.110-220.0	5.110-282.0	3
5	WASHER	5.115-358.0	5.110-484.0	3
6	FLAT HEADED SCREW	7.305-050.0	7.306-183.0	3
7	WASHER	5.115-539.0	5.115-522.0	3
8	HELICAL SPRING	5.332-281.0	5.332-281.0	3
9	GASKET	6.362-796.0	6.362-796.0	1
10	HOUSING	5.060-432.0	5.060-397.0	1
11	SCREW	7.306-105.0	7.306-105.0	2
12	GROOVED RING	6.365-052.0	6.365-059.0	3
13	WASHER	5.115-537.0	5.115-520.0	3
14	SEAL	6.365-053.0	6.365-056.0	3
15	BUSH	5.112-420.0	5.112-414.0	3
16	WASHER	5.115-538.0	5.115-521.0	3
17	GASKET	6.362-092.0	6.362-092.0	3
18	GROOVED RING	6.365-330.0	6.365-055.0	3
19	CYLINDER HEAD	5.550-192.0	5.550-172.0	1
20	CHEESE HEAD SCREW	7.306-155.0	7.306-155.0	4
21	OIL	6.288-050.0	6.288-016.0	1
100	PUMP SET	2.883-322.0	2.883-302.0	1

PUMP SET - DELIVERY SIDE OF PUMP

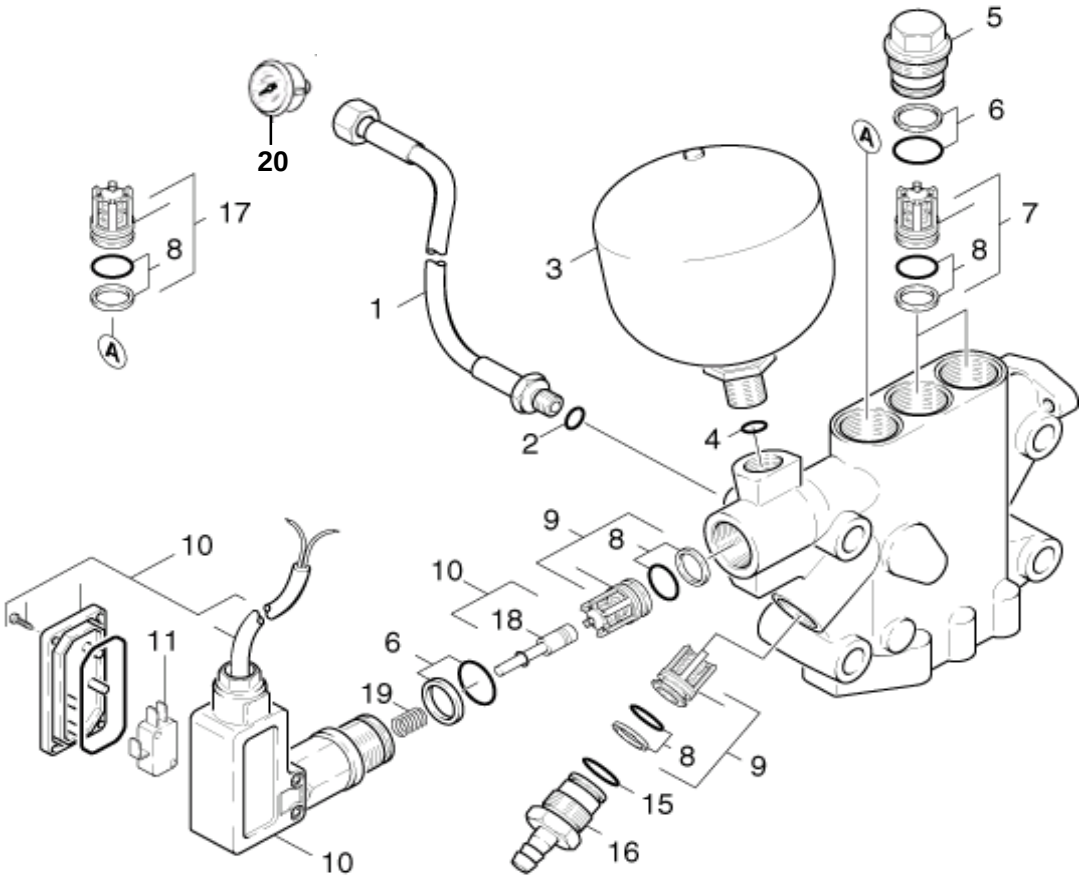

Pos.	Description	Part No. (HDS 745)	Part No. (HDS 895)	Qty.
1	HIGH PRESSURE HOSE	6.389-635.0	6.389-635.0	1
2	JOINT RING	7.362-003.0	7.362-003.0	1
3	PULSATION DAMPER	6.505-041.0	6.505-041.0	1
4	GASKET	6.362-176.0	6.362-176.0	1
5	VALVE SCREW	5.583-125.0	5.583-125.0	3
6	GASKET	6.362-500.0	6.362-500.0	4
7	VALVE	4.580-229.0	4.580-229.0	2
8	GASKET	6.362-466.0	6.362-466.0	5
9	VALVE	4.580-230.0	4.580-230.0	2
10	PRESSURE SWITCH	6.631-806.0	6.631-786.0	1
11	SWITCH	6.631-792.0	6.631-792.0	1
15	GASKET	6.362-481.0	6.362-481.0	1
16	HOSE STEM	5.443-336.0	5.443-336.0	1
17	VALVE	4.580-237.0	4.580-237.0	1
18	PISTON	6.630-038.0	6.630-038.0	1
19	PRESSURE SPRING	6.330-202.0	6.330-204.0	1
20	PRESSURE GAUGE	6.421-170.0	6.421-170.0	1
100	PUMP SET	2.883-322.0	2.883-302.0	1

PUMP SET - SUCTION SIDE

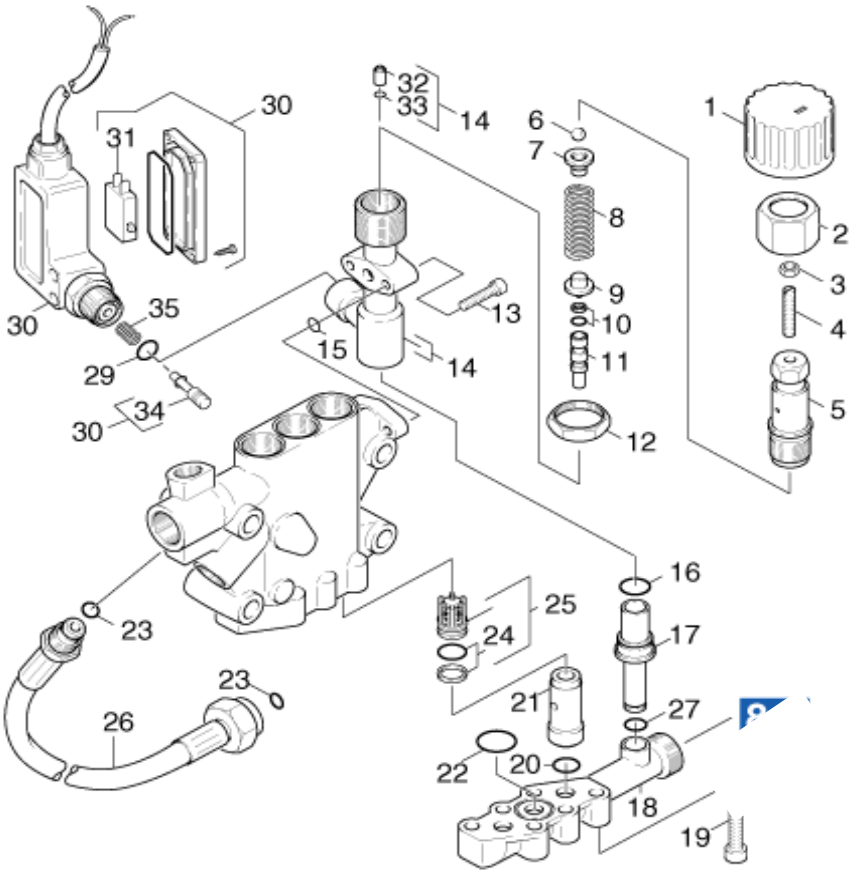

PUMP SET - SUCTION SIDE

Pos.	Description	Part No. (HDS 745)	Part No. (HDS 895)	Qty.
1	HANDLE	5.321-406.0	5.321-406.0	1
2	HEXAGON NUT	5.311-164.0	5.311-164.0	1
3	HEXAGON NUT	7.311-003.0	7.311-003.0	1
4	THREADED PIN	7.307-418.0	7.307-418.0	1
5	HEXAGONAL HEAD SCREW	5.304-061.0	5.304-061.0	1
6	BALL	7.401-918.0	7.401-918.0	1
7	VALVE DISC	5.582-103.0	5.582-103.0	1
8	HELICAL SPRING	5.332-296.0	5.332-285.0	1
10	GASKET	6.363-115.0	6.363-115.0	1
11	PISTON	5.553-249.0	5.553-249.0	1
12	HEXAGON NUT	5.311-165.0	5.311-165.0	1
13	SCREW	7.306-105.0	7.306-105.0	1
14	HOUSING	4.060-224.0	4.060-224.0	1
15	GASKET	6.362-482.0	6.362-482.0	1
16	GASKET	6.362-534.0	6.362-534.0	1
17	CONNECTION PIECE	5.402-533.0	5.402-529.0	1
18	VALVE HOUSING	5.587-141.0	5.587-141.0	1
19	CHEESE HEAD SCREW	7.306-044.0	7.306-044.0	6
20	GASKET	6.362-153.0	6.362-153.0	2
21	SLEEVE	5.110-518.0	5.110-518.0	2
22	GASKET	6.362-547.0	6.362-547.0	1
23	GASKET	6.362-392.0	6.362-392.0	2
24	GASKET	6.362-466.0	6.362-466.0	3
25	VALVE	4.580-229.0	4.580-229.0	3
26	HIGH PRESSURE HOSE	6.389-568.0	6.389-568.0	1
27	GASKET	6.362-797.0	6.362-797.0	1
29	GASKET SET	2.880-154.0	2.880-154.0	1
30	PRESSURE SWITCH	6.630-050.0	6.630-050.0	1
31	SWITCH	6.631-792.0	6.631-792.0	1
32	VALVE SEAT	5.581-143.0	5.581-143.0	1
33	GASKET	6.362-703.0	6.362-703.0	1
34	PISTON	6.630-038.0	6.630-038.0	1
35	PRESSURE SPRING	6.330-202.0	6.330-202.0	1
100	PUMP SET	2.883-322.0	2.883-302.0	1

MOTOR

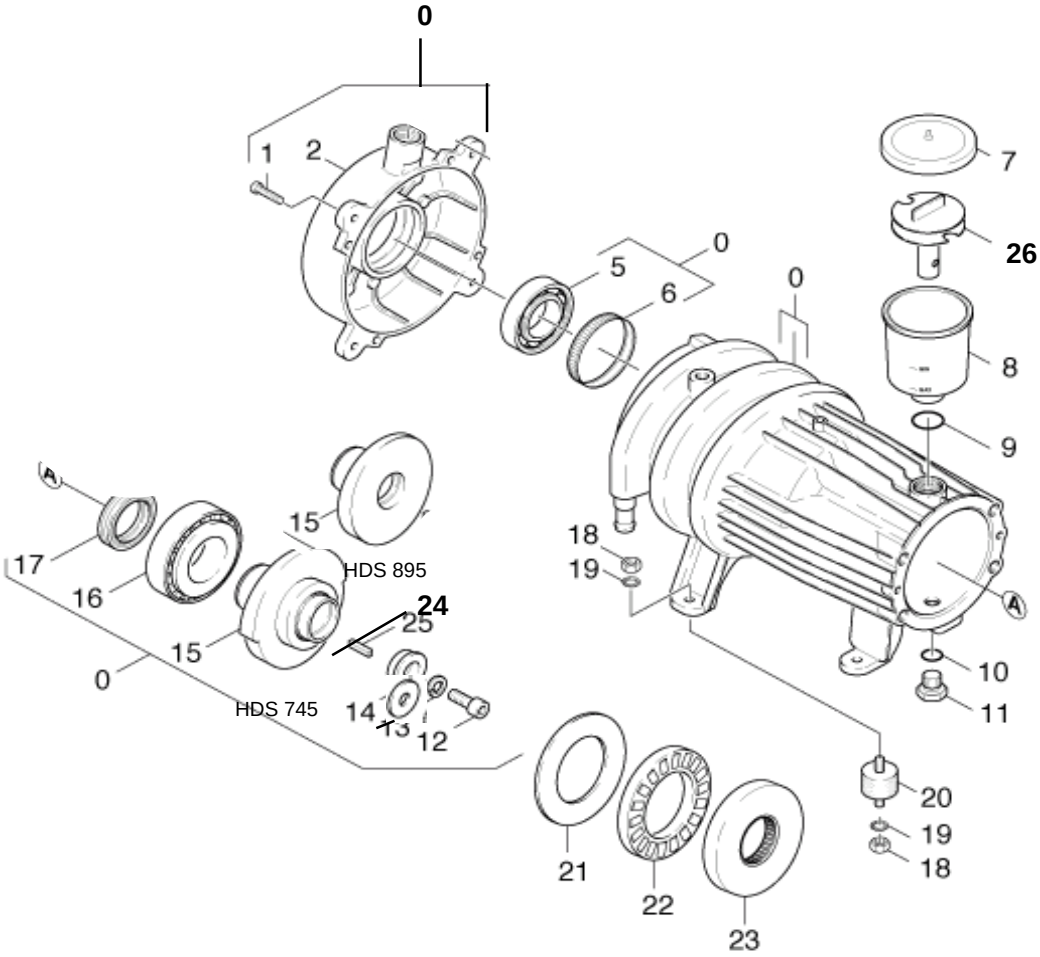

0
1
2
5
0
6
0
7
26
8
9
A
15
17
16
HDS 895
24
25
15
0
HDS 745
14
13
12
18
19
A
10
11
20
19
18
21
22
23

MOTOR

Pos.	Description	Part No. (HDS 745)	Part No. (HDS 895)	Qty.
0	MOTOR	4.623-200.0	4.623-205.0	1
1	SCREW	7.303-048.0	7.303-048.0	4
2	COVER	5.063-452.0	5.063-452.0	1
5	BALL BEARING	6.401-253.0	6.401-253.0	1
6	TOLERANCE RING	6.343-010.0	6.343-010.0	1
7	COVER	5.063-237.0	5.063-189.0	1
8	TANK	5.070-048.0	5.070-048.0	1
9	GASKET	6.362-168.0	6.362-168.0	1
10	GASKET	6.362-458.0	6.362-458.0	1
11	CLOSING SCREW	5.411-100.0	5.411-100.0	1
12	CHEESE HEAD SCREW	7.306-144.0	7.306-041.0	1
13	SPRING WASHER	7.313-051.0	7.312-159.0	1
14	WASHER	5.115-540.0	5.115-565.0	1
15	SWASH PLATE	4.120-159.0	4.120-234.0	1
16	TAPER ROLLER BEARING	6.401-225.0	6.401-225.0	1
17	ROTARY SHAFT SEAL	7.367-009.0	7.367-009.0	1
18	HEXAGON NUT	7.311-004.0	7.311-004.0	8
19	LOCK WASHER	7.312-166.0	7.312-166.0	8
20	RUBBER BUFFER	6.339-060.0	6.339-060.0	4
21	ROTOR DISC	6.401-122.0		1
22	THRUST ROLLER BEARING	6.401-123.0		1
23	PRESSURE DISC	6.401-124.0		1
24	INNER RING	6.401-121.0		1
25	SPRING	7.318-089.0	7.318-035.0	1
26	MOULDED PART	5.030-389.0	5.030-389.0	1

BLOWER

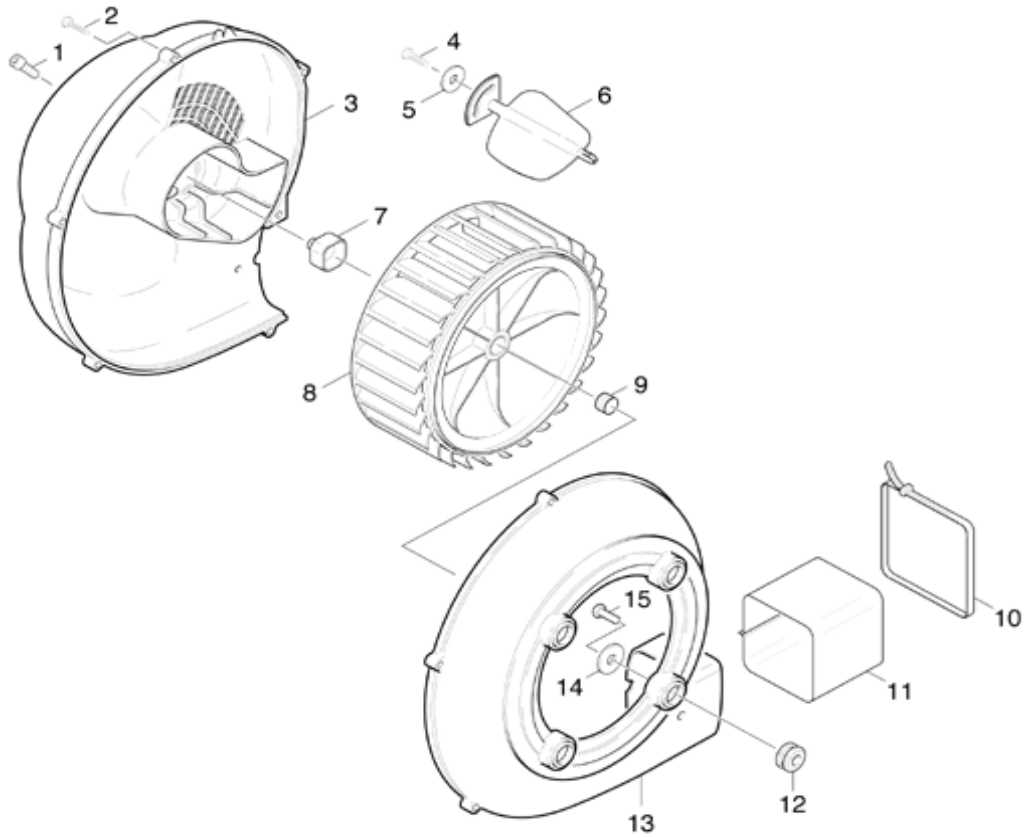

Pos.	Description	Part No. (HDS 745)	Part No. (HDS 895)	Qty.
1	SCREW	7.306-090.0	7.306-090.0	1
2	OVAL HEAD SCREW	6.303-089.0	6.303-089.0	6
3	COVER (BLOWER)	5.063-457.0	5.063-457.0	1
4	SHEET METAL SCREW	7.303-077.0	7.303-077.0	1
5	WASHER	7.312-278.0	7.312-278.0	1
6	AIR FLAP	5.606-005.0	5.606-005.0	1
7	COUPLING ELEMENT	5.471-060.0	5.471-060.0	1
8	BLOWER WHEEL	5.600-045.0	5.600-045.0	1
9	TOLERANCE RING	6.343-027.0	6.343-027.0	1
10	BANNER	6.388-608.0	6.388-608.0	2
11	CLOTH COLLAR	5.178-026.0	5.178-026.0	1
12	RUBBER RING	5.379-019.0	5.379-019.0	4
13	HOUSING (BLOWER)	5.605-168.0	5.605-168.0	1
14	WASHER	5.115-233.0	5.115-233.0	4
15	SCREW	7.303-048.0	7.303-048.0	4

CHEMICAL SYSTEM

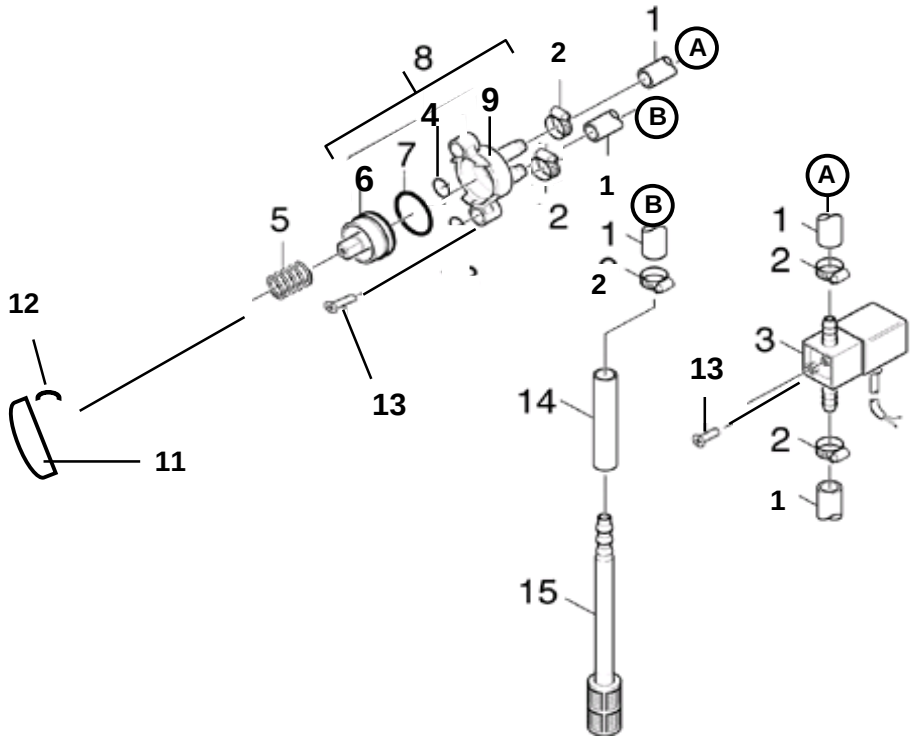

Pos.	Description	Part No. (HDS 745)	Part No. (HDS 895)	Qty.
1	HOSE	6.388-194.0	6.388-194.0	1
2	HOSE BAND CLIP	6.388-515.0	6.388-515.0	5
3	SOLENOID VALVE	6.685-195.0	6.685-195.0	1
4	GASKET	6.362-386.0	6.362-386.0	1
5	HELICAL SPRING	5.332-028.0	5.332-028.0	1
6	VALVE SEAT	5.581-039.0	5.581-039.0	1
7	GASKET	6.362-712.0	6.362-712.0	1
8	VALVE	4.580-188.0	4.580-188.0	1
9	VALVE HOUSING	5.587-054.0	5.587-054.0	1
11	HANDLE	5.321-379.0	5.321-379.0	1
12	SPRING	5.337-021.0	5.337-021.0	1
13	SHEET METAL SCREW	7.305-036.0	7.305-036.0	4
14	PIPE	5.025-747.0	5.025-747.0	1
15	FILTER	6.414-136.0	6.414-136.0	1

ELECTRIC BOX COMPONENTS

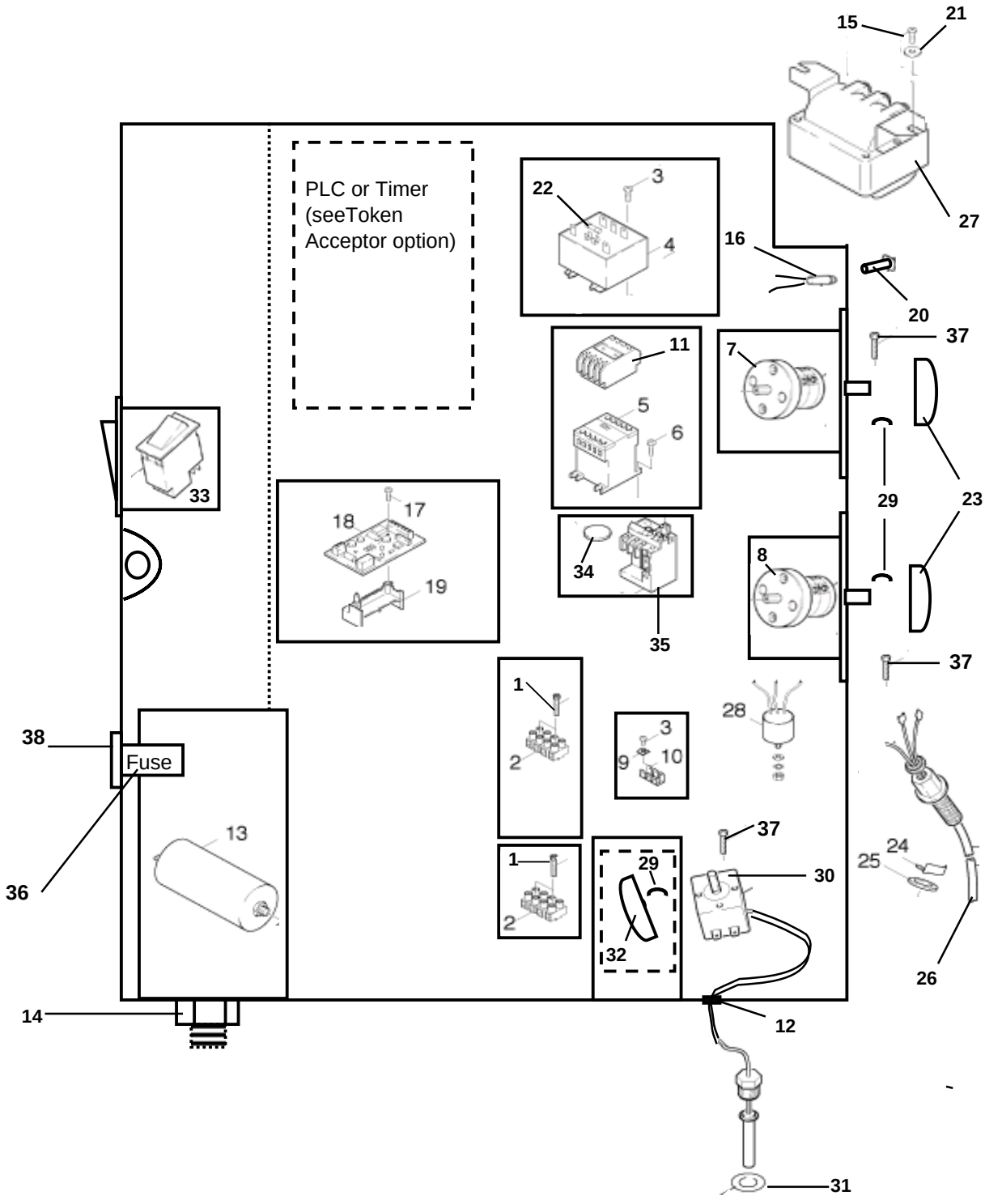

ELECTRIC BOX COMPONENTS

Pos.	Description	Part No. (HDS 745)	Part No. (HDS 895)	Qty.
1	SELF-TAPPING SCREW	7.303-501.0	7.303-501.0	4
2	STRIP TERMINAL	6.643-249.0	6.643-249.0	1
3	SELF-TAPPING SCREW	6.303-017.0	6.303-017.0	4
4	TRANSFORMER	6.622-242.0	6.622-241.0	1
5	CONTACTOR	6.632-285.0	6.632-132.0	1
6	SCREW	7.303-033.0	7.303-033.0	2
7	SWITCH	6.631-081.0	6.631-081.0	1
8	SWITCH	6.631-575.0	6.631-575.0	1
9	CLAMP DISC	6.641-804.0	6.641-804.0	1
10	EARTH CONNECTOR	6.641-270.0	6.641-270.0	1
11	CONTACTOR	6.632-156.0	6.632-156.0	1
12	BUSH	6.641-422.0	6.641-422.0	1
13	CAPACITOR	6.661-181.0		1
14	HEXAGON NUT	7.311-004.0		1
15	SCREW	7.303-036.0	7.303-036.0	2
16	LAMP	6.651-275.0	6.651-275.0	3
17	SELF-TAPPING SCREW	7.303-506.0	7.303-506.0	1
18	PULSE GENERATOR	6.682-306.0	6.682-306.0	1
19	SUPPORT	5.057-043.0	5.057-043.0	1
20	HOUSING	6.651-276.0	6.651-276.0	3
21	WASHER	7.312-260.0	7.312-260.0	2
22	FUSE	6.644-052.0	6.644-052.0	1
23	HANDLE	5.321-377.0	5.321-377.0	2
24	SECURING CLIP	6.343-170.0		1
25	WASHER	5.115-255.0		1
26	CABLE	6.647-275.0		1
27	TRANSFORMER	2.883-465.0	2.883-468.0	1
28	INTERFERENCE FILTER	4.828-008.0		1
29	SPRING	6.313-014.0	6.313-014.0	3
30	THERMOSTAT	6.685-375.0	6.685-375.0	1
31	SEAL	5.115-375.0	5.115-375.0	1
32	HANDLE	5.321-378.0	5.321-378.0	1
33	SWITCH	6.631-758.0	6.631-758.0	1
34	BUTTON		5.326-010.0	1
35	OVERLOAD RELAY		6.633-242.0	1
36	FUSE	6.644-052.0	6.644-052.0	1
37	SCREW	7.305-255.0	7.305-255.0	6
38	FUSE HOLDER	RS 384-027	RS 384-027	1

FUEL

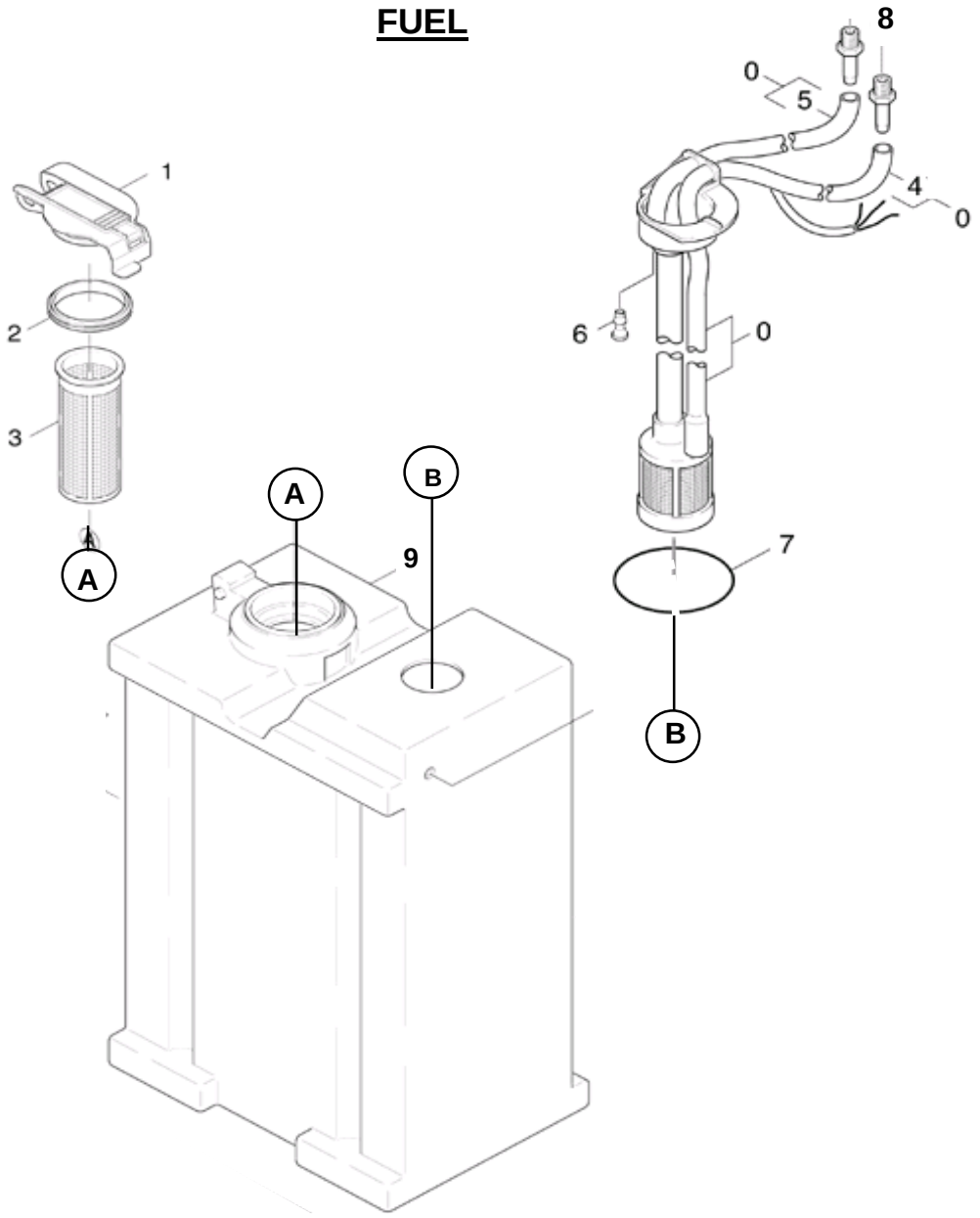

Pos.	Description	Part No. (HDS 745)	Part No. (HDS 895)	Qty.
0	PIPELINES	4.421-263.0	4.421-263.0	1
1	COVER	5.063-664.0	5.063-664.0	1
2	JOINT RING	5.363-300.0	5.363-300.0	1
3	FILTER	5.731-039.0	5.731-039.0	1
4	HOSE	6.389-968.0	6.389-968.0	1
5	HOSE	6.389-969.0	6.389-969.0	1
6	SLEEVE	5.110-532.0	5.110-532.0	1
7	JOINT RING	5.363-306.0	5.363-306.0	1
8	HOSE STEM	6.472-927.0	6.472-927.0	2
9	FUEL TANK	5.071-085.0	5.071-085.0	1

FUEL PUMP

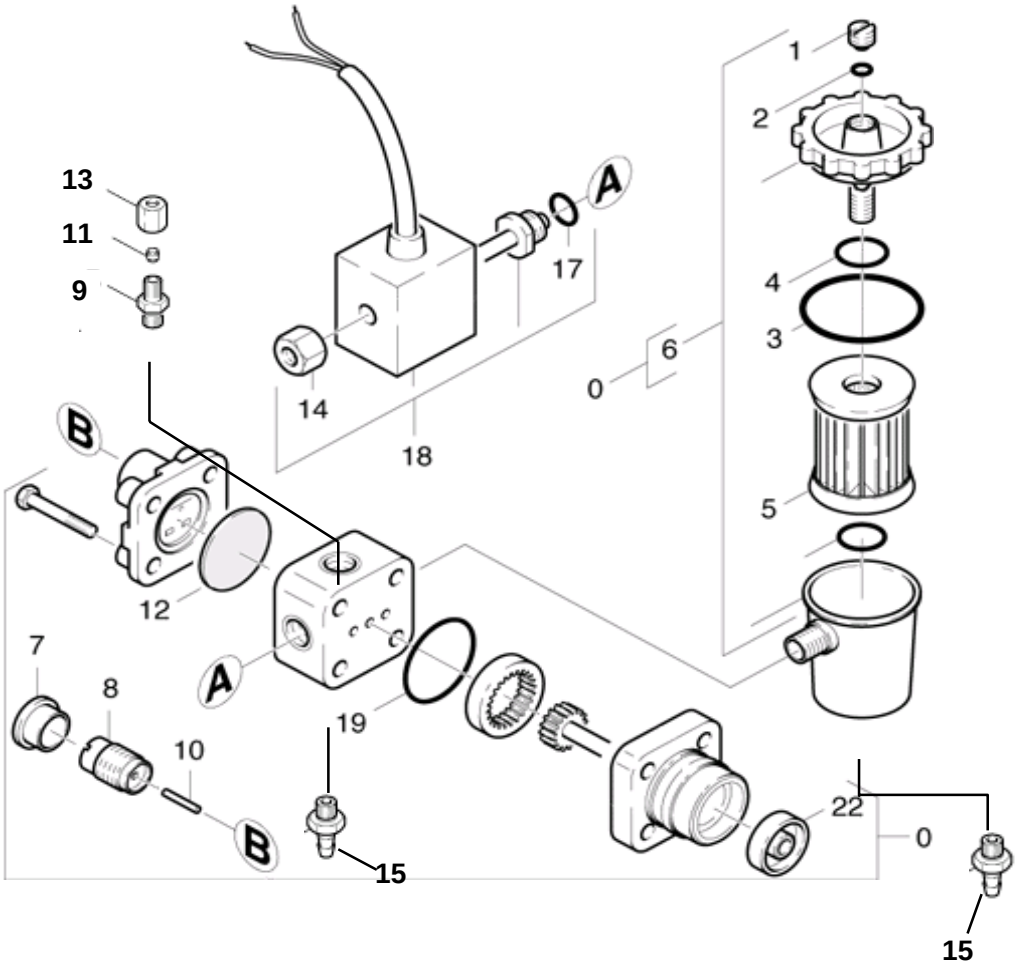

Pos.	Description	Part No. (HDS 745)	Part No. (HDS 895)	Qty.
0	FUEL PUMP	6.472-925.0	6.472-925.0	1
1	VENT SCREW	6.472-107.0	6.472-107.0	1
2	GASKET	6.472-106.0	6.472-106.0	1
3	GASKET	6.472-111.0	6.472-111.0	1
4	GASKET	6.472-112.0	6.472-112.0	1
5	FILTER CARTRIDGE	6.472-113.0	6.472-113.0	1
6	FILTER CASE	6.472-123.0	6.472-123.0	1
7	PROTECTING CAP	6.472-122.0	6.472-122.0	1
8	SPRING HOUSING	6.472-109.0	6.472-109.0	1
9	SCREW UNION	6.389-261	6.389-261	1
10	PIN	6.472-108.0	6.472-108.0	1
11	OLIVE	6.389-263	6.389-263	1
12	DIAPHRAGM	6.472-128.0	6.472-128.0	1
13	UNION NUT	6.472-262	6.472-262	1
14	KNURLED NUT	6.472-340.0	6.472-340.0	1
15	HOSE STEM	6.472-927	6.472-927	2
17	GASKET	6.472-125.0	6.472-125.0	1
18	SOLENOID VALVE	6.472-411.0	6.472-411.0	1
19	GASKET	6.472-120.0	6.472-120.0	1

22	SHAFT SEAL	6.472-105.0	6.472-105.0	1

BURNER TOP

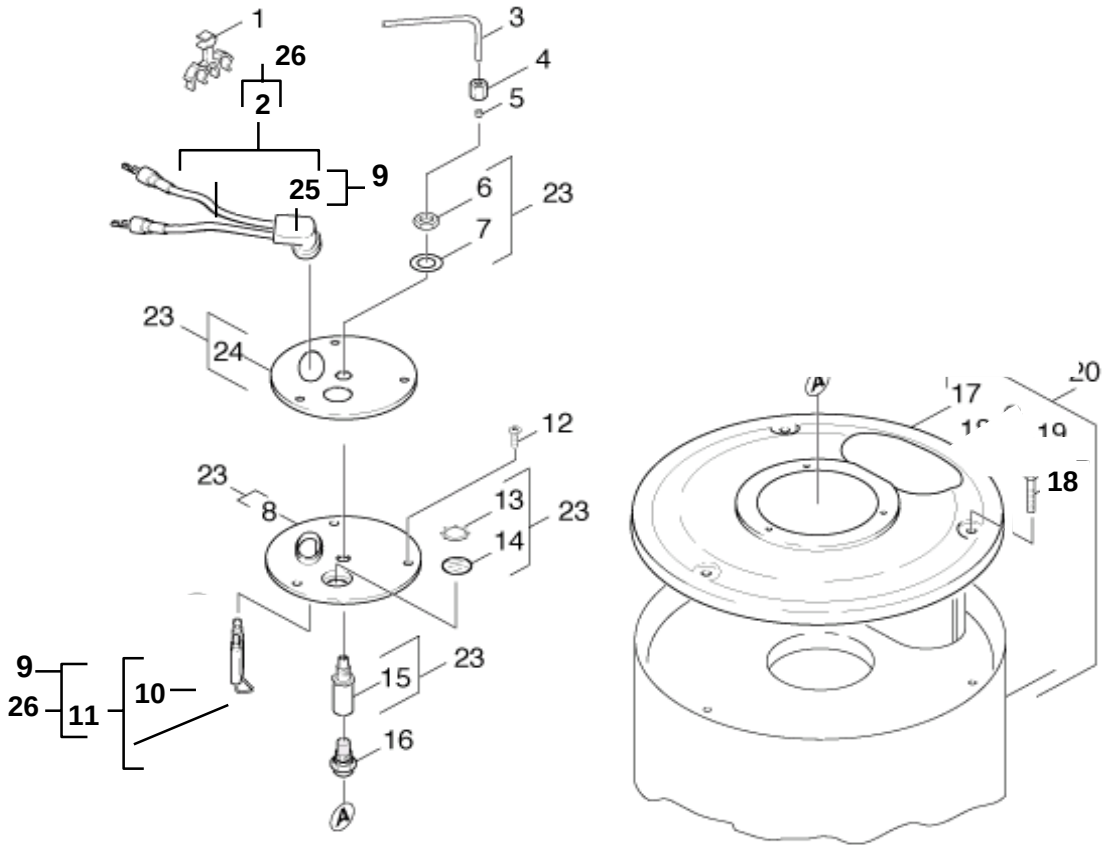
1
26
2
3
4
5
9
25
6
23
7
23
24
12
23
8
13
23
14
9
26
11
10
15
23
16
A
A
17
20
19
18

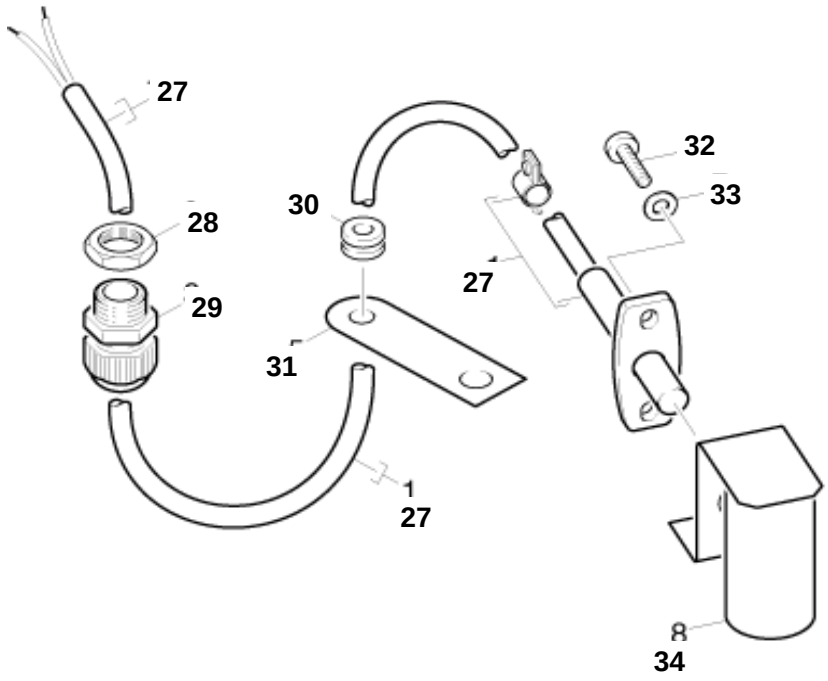
27
28
29
30
32
33
27
31
1
27
8
34

BURNER TOP

Pos.	Description	Part No. (HDS 745)	Part No. (HDS 895)	Qty.
1	BRACKET	6.647-527.0	6.647-527.0	1
2	IGNITION CABLE	4.821-071.0	4.821-071.0	1
3	PIPE	5.423-186.0	5.423-186.0	1
4	UNION NUT	6.389-262.0	6.389-262.0	1
5	CUTTING RING	6.389-263.0	6.389-263.0	1
6	HEXAGON NUT	7.311-101.0	7.311-101.0	1
7	WASHER	7.312-302.0	7.312-302.0	1
8	BURNER COVER	5.662-019.0	5.662-019.0	1
9	ELECTRODE KIT	2.638-974.0	2.638-974.0	1
10	OVAL HEAD SCREW	7.306-328.0	7.306-328.0	1
11	SPARE PARTS SET	2.884-085.0	2.884-085.0	1
12	SCREW	7.303-038.0	7.303-038.0	3
13	RING	6.343-165.0	6.343-165.0	1
14	GLASS PANE	6.278-018.0	6.278-018.0	1
15	NOZZLE HOLDER	5.667-055.0	5.667-055.0	1
16	NOZZLE	6.415-761.0	6.415-641.0	1
17	COVER	5.654-045.0	5.654-045.0	1
18	SELF-TAPPING SCREW	6.303-258.0	6.303-258.0	3
20	OUTER JACKET	4.652-077.0	4.652-077.0	1
23	CONVERSION KIT	2.882-392.0	2.882-392.0	1
24	COVER	5.654-059.0	5.654-059.0	1
25	PROTECTING CAP	5.394-470.0	5.394-470.0	1
26	ELECTRODE KIT (inc. HT leads)	2.638-976.0	2.638-976.0	1
27	LIGHT SENSOR	6.664-030.0	6.664-030.0	1
28	NUT	6.648-406.0	6.648-406.0	1
29	CABLE GLAND	6.648-391.0	6.648-391.0	1
30	GROMMIT	6.641-638.0	6.641-638.0	1
31	PLATE	5.042-833.0	5.042-833.0	1
32	SCREW M4 x 16	6.303-015.0	6.303-015.0	2
33	WASHER	7.312-001.0	7.312-001.0	2
34	BRACKET	4.043-246.0	4.043-246.0	1

BURNER COIL

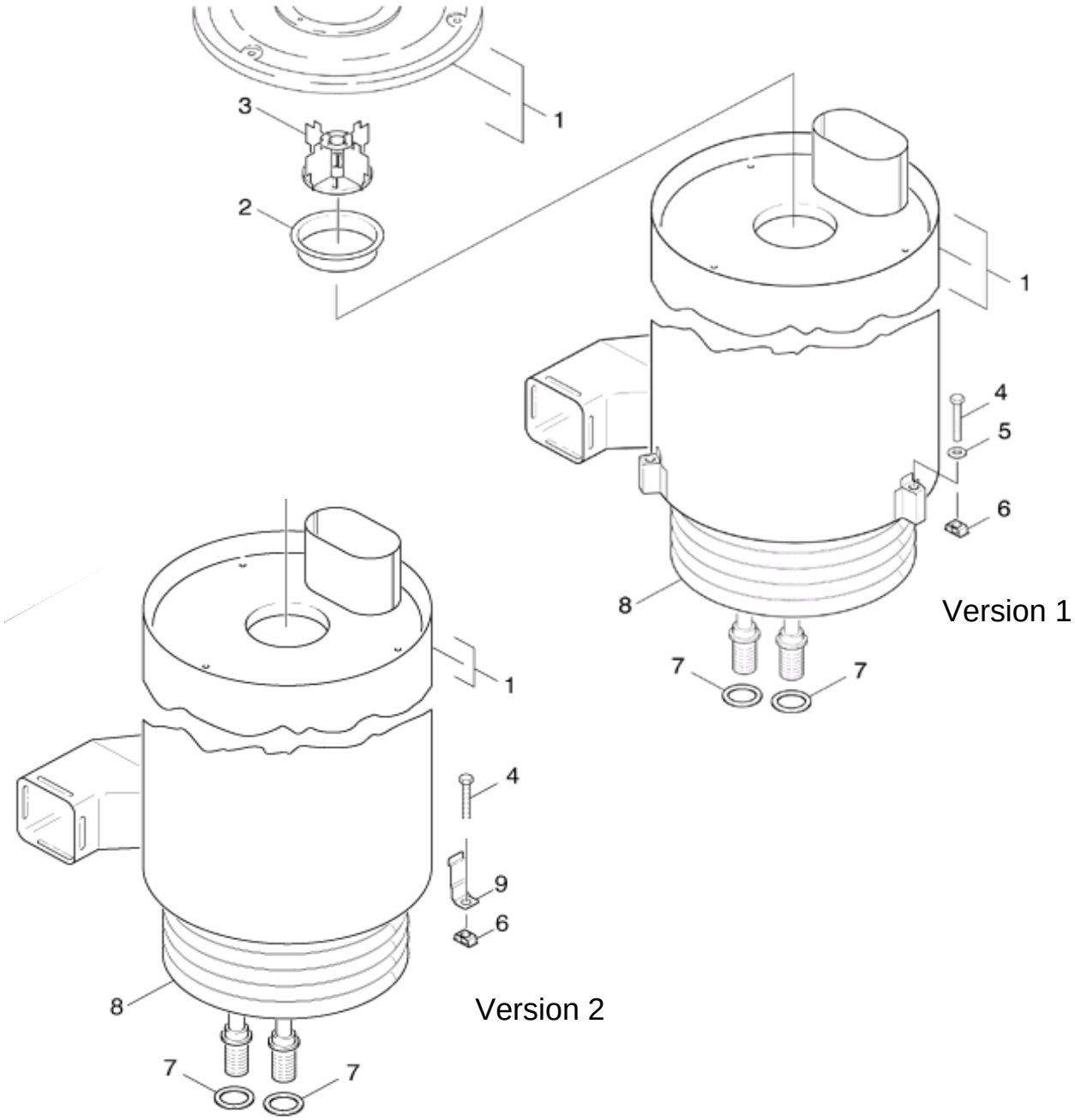

Pos.	Description	Part No. (HDS 745)	Part No. (HDS 895)	Qty.
1	OUTER JACKET (VERSION 1)	4.652-077.0	4.652-077.0	1
1	OUTER JACKET (VERSION 2)	4.562-123.0	4.562-123.0	1
2	BURNER PART (VERSION 1)	5.664-211.0	5.664-195.0	1
2	BURNER PART (VERSION 2)	5.664-207.0	5.664-195.0	1
3	BURNER CAGE	4.663-073.0	4.663-088.0	1
4	HEXAGONAL HEAD SCREW (V 1)	7.304-096.0	7.304-096.0	3
4	HEXAGONAL HEAD SCREW (V 2)	7.304-051.0	7.304-051.0	3
5	WASHER	7.312-277.0	7.312-277.0	3
6	NUT	6.310-081.0	6.310-081.0	2
7	SEAL	5.365-068.0	5.365-068.0	2
8	HEATING COIL	4.680-097.0	4.680-097.0	1
9	BRACKET	5.044-420.0	5.044-420.0	3

BURNER BASE

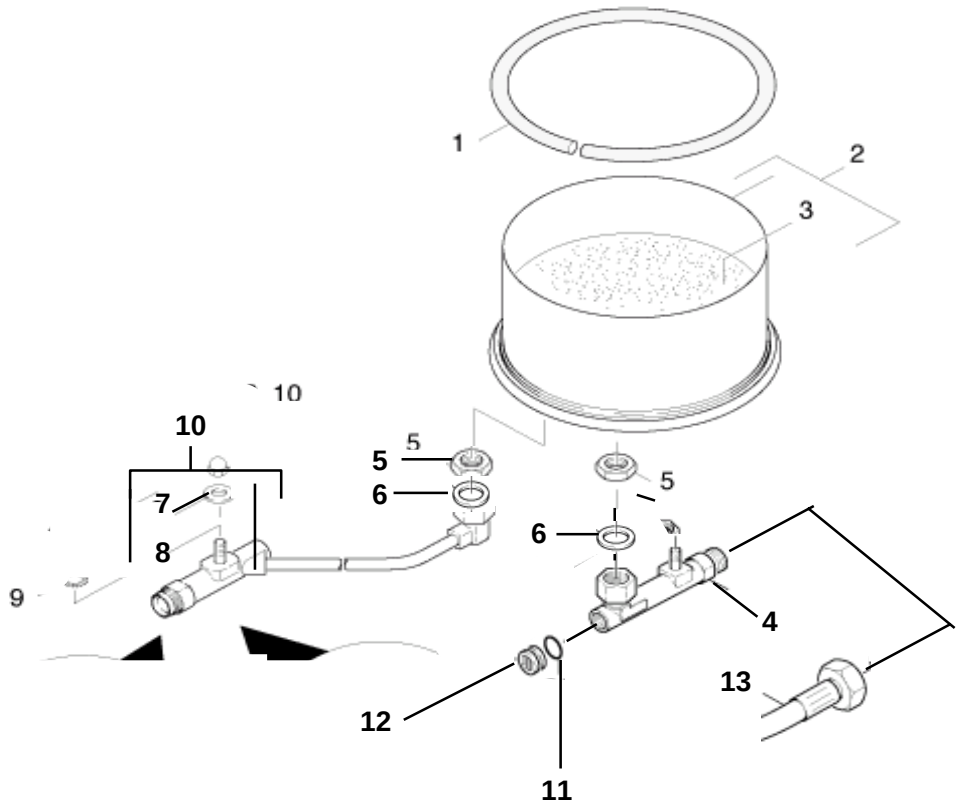

Pos.	Description	Part No. (HDS 745)	Part No. (HDS 895)	Qty.
1	SEAL STRING	6.366-037.0	6.366-037.0	1
2	BOTTOM	4.655-047.0	4.655-047.0	1
3	REFRACTORY MATERIAL	2.889-061.0	2.889-061.0	8
4	MANIFOLD	4.427-123.0	4.427-123.0	1
5	HEXAGON NUT	7.311-155.0	7.311-155.0	2
6	COPPER SEAL	5.363-360.0	5.363-360.0	2
7	HEXAGON NUT	7.311-511.0	7.311-511.0	1
8	WASHER	7.312-262.0	7.312-262.0	1
9	LOCK WASHER	7.312-160.0	7.312-160.0	1
10	PIPELINES	9.533-096.0	9.533-096.0	1
11	SEAL RING	5.115-375.0	5.115-375.0	1
12	PLUG	RS 231 5051	RS 231 5051	1
13	HOSE	6.388-910.0	6.388-910.0	1

FLOAT TANK

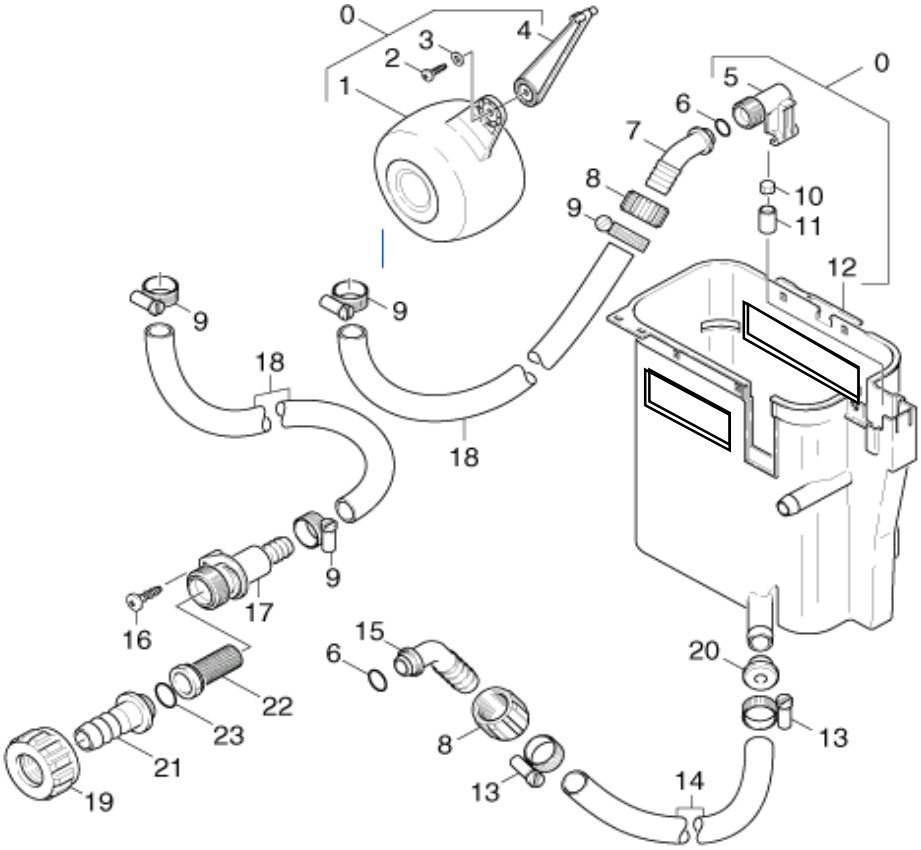

Pos.	Description	Part No. (HDS 745)	Part No. (HDS 895)	Qty.
0	FLOAT VALVE	3.593-108.0	3.593-108.0	1
1	FLOAT	5.585-004.0	5.585-004.0	1
2	SCREW	7.303-104.0	7.303-104.0	1
3	WASHER	7.312-282.0	7.312-282.0	1
4	LEVER	5.481-118.0	5.481-118.0	1
5	VALVE HOUSING	5.587-147.0	5.587-147.0	1
6	GASKET	6.362-078.0	6.362-078.0	2
7	HOSE STEM	5.443-285.0	5.443-285.0	1
8	NUT	5.310-062.0	5.310-062.0	2
9	HOSE BAND CLIP	6.388-547.0	6.388-547.0	4
10	SEAL	5.364-095.0	5.364-095.0	1
11	VALVE PIN	5.584-085.0	5.584-085.0	1
12	TANK	5.070-577.0	5.070-577.0	1
13	HOSE BAND CLIP	6.388-548.0	6.388-548.0	4
14	HOSE	6.389-556.0	6.389-556.0	1
15	HOSE STEM	5.443-211.0	5.443-211.0	1
16	SCREW	7.303-112.0	7.303-112.0	1
17	MANIFOLD	5.427-154.0	5.427-154.0	1
18	HOSE	6.390-577.0	6.390-577.0	1
19	NUT	5.310-076.0	5.310-076.0	1
20	BUSH	5.112-189.0	5.112-286.0	1
21	HOSE STEM	5.443-291.0	5.443-291.0	1
22	STRAINER	6.414-141.0	6.414-141.0	1
23	GASKET	6.362-161.0	6.362-161.0	1

WATER SOFTENER

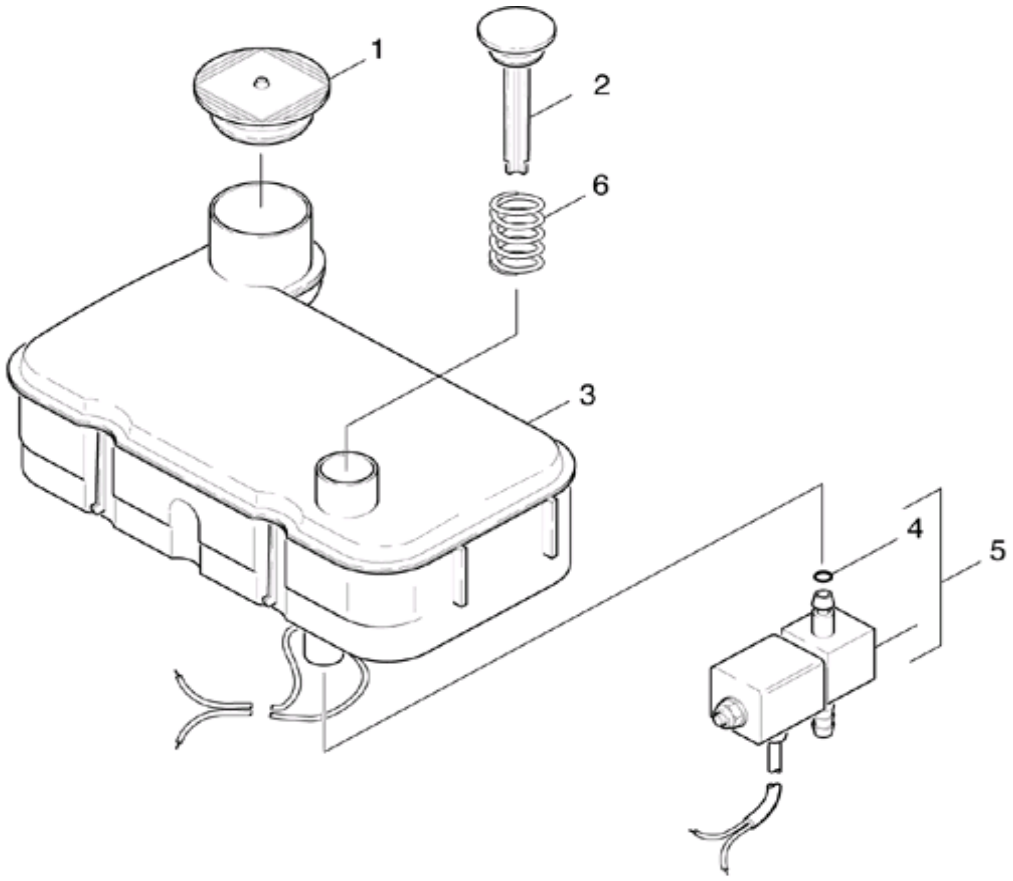

Pos.	Description	Part No. (HDS 745)	Part No. (HDS 895)	Qty.
1	COVER	5.063-487.0	5.063-487.0	1
2	COVER	5.063-507.0	5.063-507.0	1
3	TANK	4.070-188.0	4.070-188.0	1
4	GASKET	6.362-113.0	6.362-113.0	1
5	SOLENOID VALVE	6.685-845.0	6.685-845.0	1
6	HELICAL SPRING	5.332-001.0	5.332-001.0	1

SAFETY SYSTEM

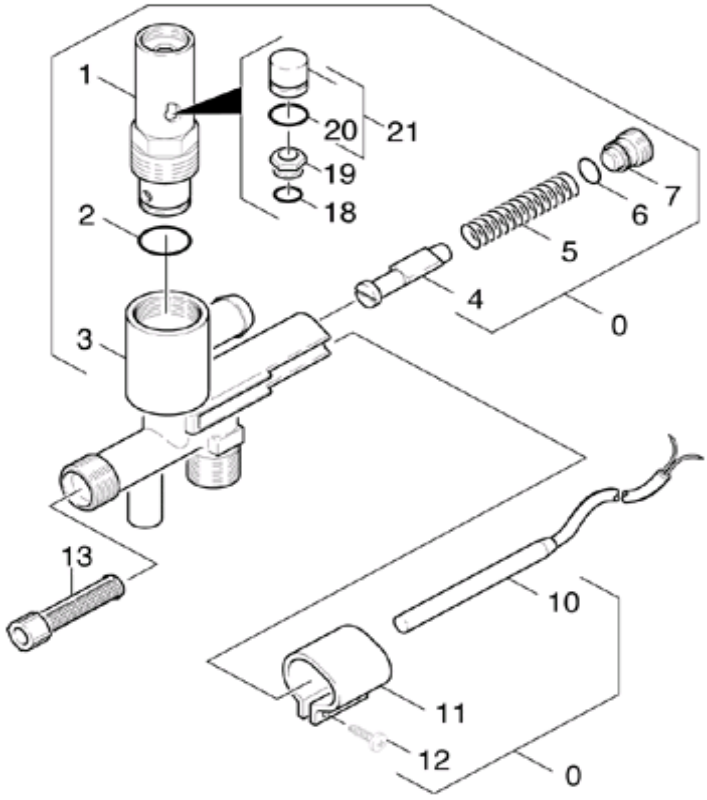

Pos.	Description	Part No. (HDS 745)	Part No. (HDS 895)	Qty.
0	SAFETY SYSTEM	4.749-129.0	4.749-117.0	1
1	SAFETY VALVE	6.412-800.0	6.412-800.0	1
2	GASKET	6.362-580.0	6.362-580.0	1
3	HOUSING	5.060-422.0	5.060-422.0	1
4	PISTON	4.553-022.0	4.553-022.0	1
5	HELICAL SPRING	5.332-057.0	5.332-057.0	1
6	GASKET	6.362-482.0	6.362-482.0	1
7	SCREW	5.305-162.0	5.305-162.0	1
10	SPARE REED SWITCH	2.880-194.0	2.880-194.0	1
11	CLAMP	5.041-076.0	5.041-076.0	1
12	OVAL HEAD SCREW	6.303-122.0	6.303-122.0	1
13	STRAINER	6.414-418.0	6.414-418.0	1
18	GASKET	6.362-388.0	6.362-388.0	1
19	VALVE SEAT	6.412-263.0	6.412-263.0	1
20	GASKET	6.362-481.0	6.362-481.0	1
21	PISTON	6.412-264.0	6.412-264.0	1

TRIGGER GUN

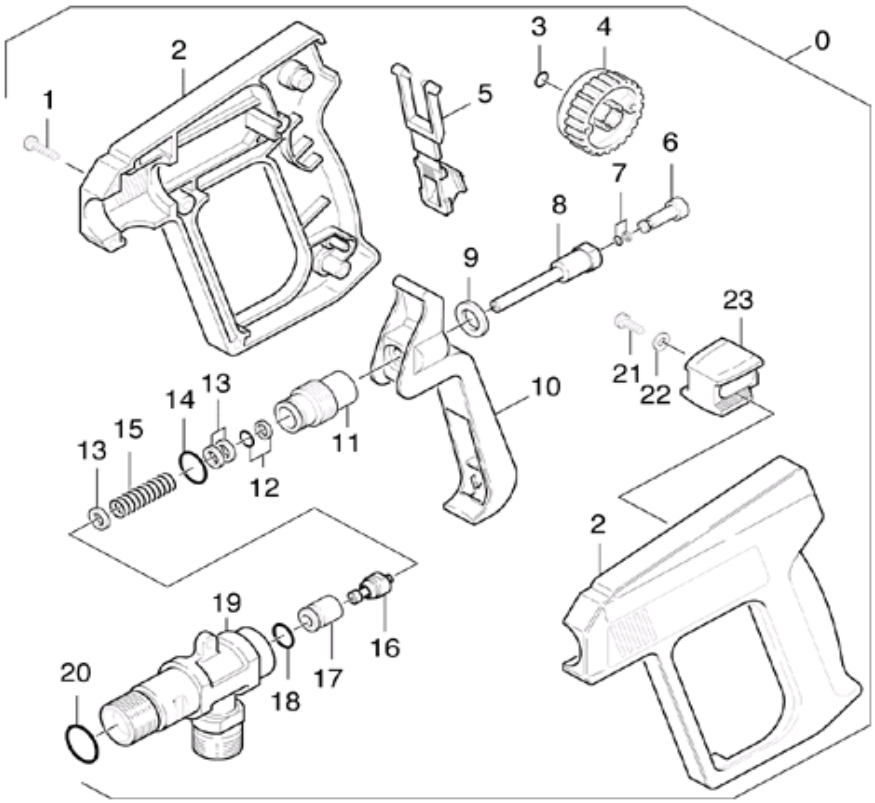

Pos.	Description	Part No. (HDS 745)	Part No. (HDS 895)	Qty.
0	TRIGGER GUN	4.775-026.0	4.775-026.0	1
1	OVAL HEAD SCREW	6.303-024.0	6.303-024.0	8
2	HANDLES	5.321-174.0	5.321-174.0	1
3	GASKET	6.362-176.0	6.362-176.0	1
4	HAND WHEEL	5.322-006.0	5.322-006.0	1
5	MOULDED PART	5.030-283.0	5.030-283.0	1
6	PISTON	5.553-118.0	5.553-118.0	1
7	GASKET	6.362-477.0	6.362-477.0	1
8	BAR	5.107-062.0	5.107-062.0	1
9	WASHER	5.115-227.0	5.115-227.0	1
10	LEVER	5.481-039.0	5.481-039.0	1
11	SCREW	5.305-110.0	5.305-110.0	1
12	GASKET	6.362-468.0	6.362-468.0	1
13	WASHER	5.115-260.0	5.115-260.0	3
14	GASKET	6.362-478.0	6.362-478.0	1
15	HELICAL SPRING	5.332-140.0	5.332-140.0	1
16	VALVE SEAT	4.581-049.0	4.581-049.0	1
17	SLEEVE	5.110-348.0	5.110-348.0	1
18	GASKET	6.362-479.0	6.362-479.0	1
19	MANIFOLD	5.427-079.0	5.427-079.0	1
20	GASKET	6.362-496.0	6.362-496.0	1
21	OVAL HEAD SCREW	6.303-025.0	6.303-025.0	1
22	WASHER	7.312-001.0	7.312-001.0	1
23	MOULDED PART	5.030-459.0	5.030-459.0	1
100	PISTOL SET	2.883-014.0	2.883-014.0	1

LANCE - HIGH PRESSURE HOSE

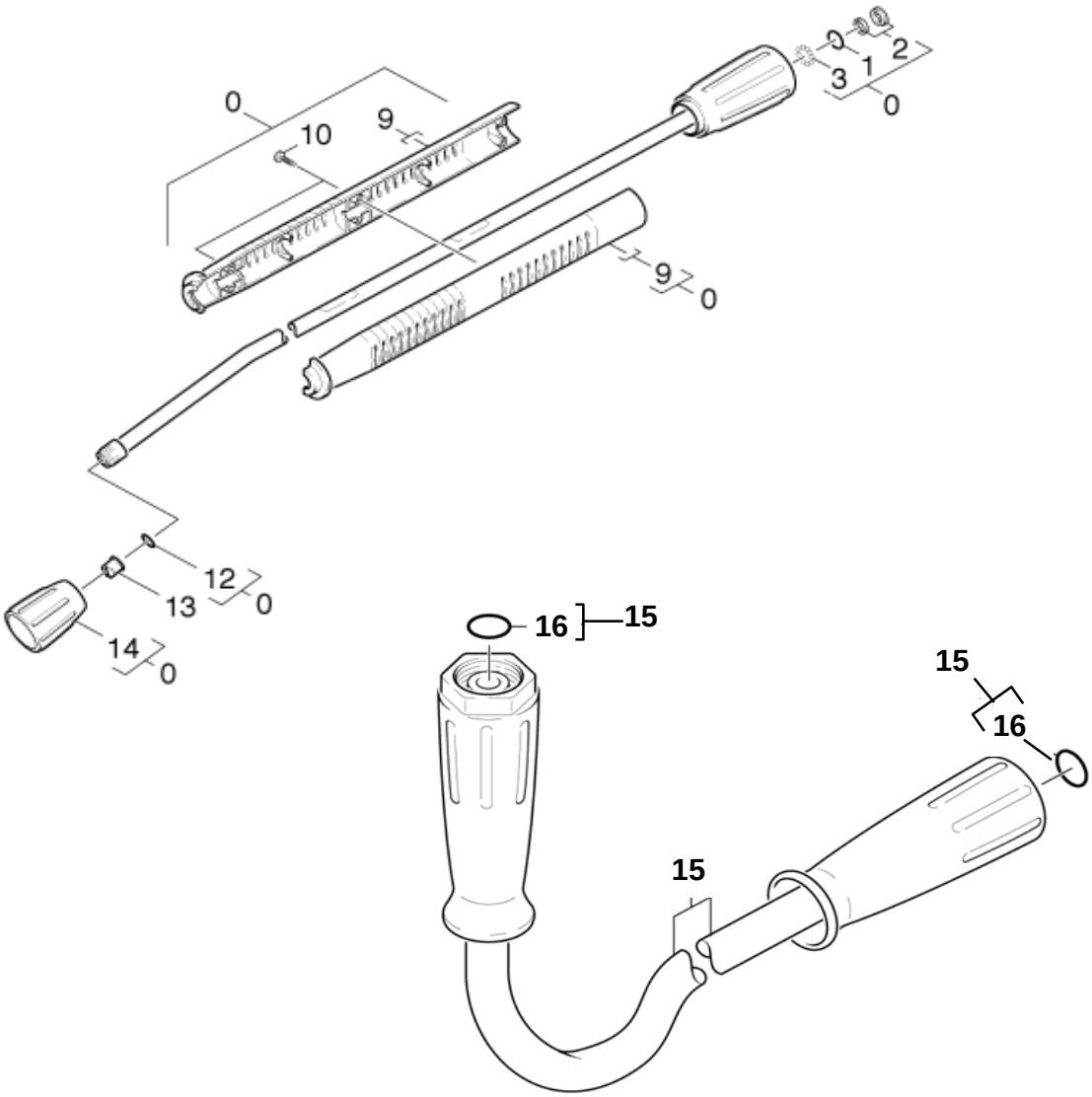

Pos.	Description	Part No. (HDS 745)	Part No. (HDS 895)	Qty.
0	JET PIPE	4.760-355.0	4.760-355.0	1
1	GASKET	6.362-524.0	6.362-524.0	1
2	GROOVED RING	6.362-532.0	6.362-532.0	1
3	BALL	7.401-915.0	7.401-915.0	20
9	HANDLES	5.321-493.0	5.321-493.0	1
10	OVAL HEAD SCREW	6.303-025.0	6.303-025.0	6
12	GASKET SET	2.880-154.0	2.880-154.0	1
13	POWER NOZZLE	2.883-401.0	2.883-401.0	1
14	SCREW UNION PART	5.401-210.0	5.401-210.0	1
15	HIGH PRESSURE HOSE	6.389-891.0	6.388-083.0	1
16	SPARE PARTS KIT	2.880-296.0	2.880-296.0	1

TOKEN ACCEPTOR (OPTION)

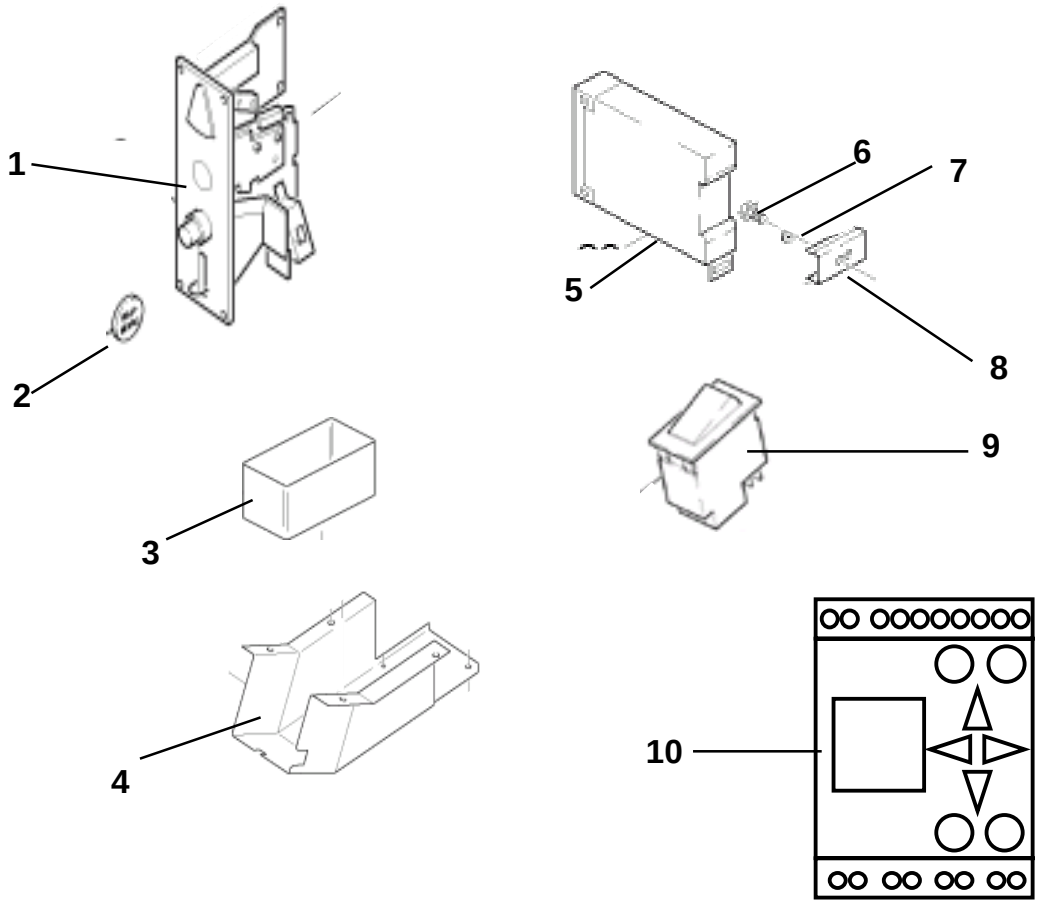

Pos.	Description	Part No. (HDS 745)	Part No. (HDS 895)	Qty.
1	COIN ACCEPTOR	6.768-063.0	6.768-063.0	1
2	TOKENS (26 MM)	6.768-169.0	6.768-169.0	1
3	BOX	6.393-170.0	6.393-170.0	1
4	BRACKET	4.042-689.0	4.042-689.0	1
5	TIMER	6.633-365.0	6.633-365.0	1
6	SCREW	7.304-483.0	7.304-483.0	1
7	WASHER	7.312-067.0	7.312-067.0	1
8	RAIL	5.802-261.0	5.802-261.0	1
9	SWITCH	6.631-758.0	6.631-758.0	1
10	PLC	9.532-158.0	9.532-158.0	1

MISCELLANEOUS PARTS

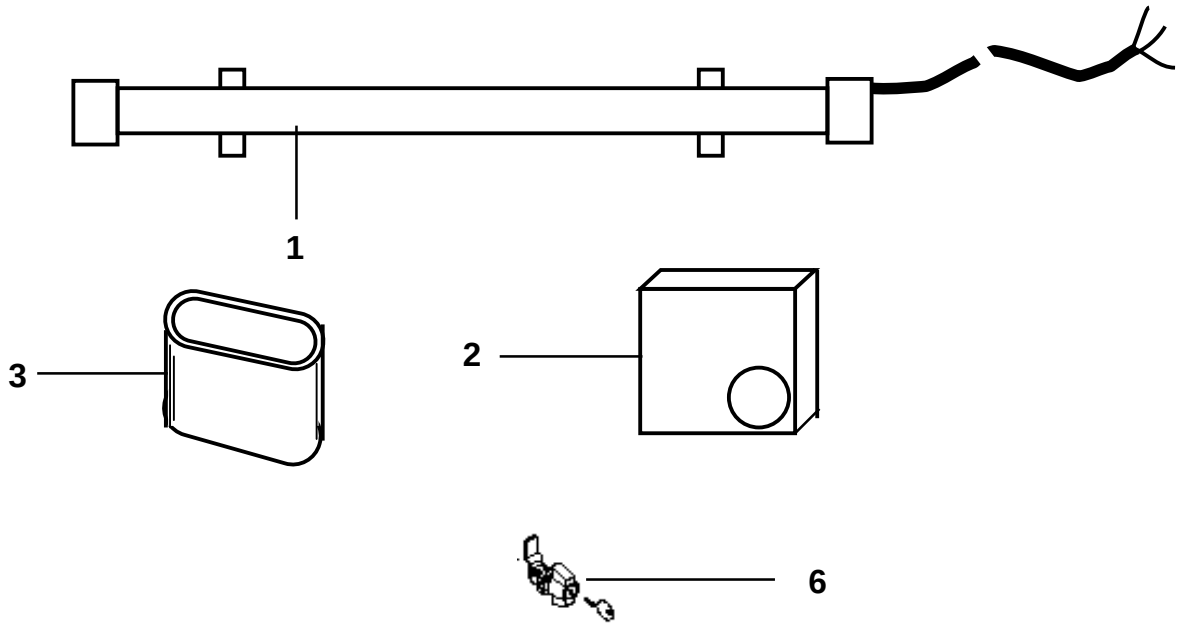

Pos.	Description	Part No. (HDS 745)	Part No. (HDS 895)	Qty.
1	TUBE HEATER	9.532-077.0	9.532-077.0	1
2	THERMOSTAT (TUBE HEATER)	9.532-078.0	9.532-078.0	1
3	FLUE EXTENSION	9.532-080.0	9.532-080.0	1
4	FUSE (TUBE HEATER)	6.644-052.0	6.644-052.0	1
5	FUSE HOLDER (TUBE HEATER)	RS 384-027	RS 384-027	1
6	DOOR LOCK (PAIR)	6.375-203.0	6.375-203.0	1
7	MAINS CABLE		5 x 2.5mm^2	1
8	DOOR/TOP COVER SEAL	RS 567-963	RS 567-963	1