793-1208

SW116PHR Washer
User Manual



Product id & serial number information

SW Series Washer User Manual

This manual and any other literature supplied should be read thoroughly before assembling and operating the Washer. Pay particular attention to any instructions relating to safety, and the starting, stopping and maintenance of the Washer. Following these instructions will ensure operator safety and prolong the life of the Washer.

This manual should be kept for future reference as it contains important safety, user and maintenance information. The model and serial number on the cover of this booklet must be quoted should you need to contact the dealer or manufacturer regarding usage, maintenance and warranty queries.

Recommended Safety Standards & Directives

This manual highlights certain safety measures which should be taken in to consideration when using the Washer. However, each contractor and operator should make their own risk assessments whilst considering their individual application and environment and ensure the user is properly trained and wearing protective clothing to the required regulatory standards. We recommend visiting the Health and Safety Executive website at www.hse.gov.uk to be properly informed on best practice whilst operating Pressure Washers in the UK.

Contents

		Page
1.	Safety Information	1
2.	Model Information	2
3.	Intended Use	3
4.	Component & Accessory Identification	4
5.	Pre-Operation Set Up	5
6.	Engine Start Up / Shut Down Procedure	6
7.	Operating Information	7
8.	Maintenance Schedule	8
9.	Storage Information	9
10.	Troubleshooting	9-10
11.	Warranty Information	11-12
12.	Environmental Protection	12
13.	EC Declaration of Conformity	13

1. Safety Information

Warning - Engines produce fumes and toxic gases.

Only operate outdoors or in a sufficiently well ventilated area.

Warning – Fuel vapours are flammable.

Allow unit to cool before refuelling at a safe distance from naked flames, ignition sources & heat. Refer to engine manufacturer's manual.

Warning – Washers can cause harm to people, animals & property.

They should only be used by properly trained operators wearing suitable protective eyewear, clothing, and non-slip footwear and in a safe, open environment.

Warning – Poorly maintained components can lead to injury.

Before every period of use ensure the Washer is in good working order. All loose connections should be tightened and worn or damaged components should be replaced before use.

Warning – The Washer is performance set at factory.

Do not adjust the engine governor or Washer valves unless qualified to do so. Over loading of engine and components can lead to equipment failure, personal injury and will void the warranty.

Warning – Damage to Washer can occur if left running.

Do not leave the Washer running in bypass for extended periods as heat build-up can damage the pump. Do not leave unit running unattended.

Warning – Never pump flammable or explosive liquids.

The Washer must only be used with liquids compatible with the pump, component & accessories.

Warning – Chemicals can damage the pump and components.

The Washer must be flushed through with clean water after every period of use as chemicals and detergents can corrode the components.

THE MANUFACTURER CANNOT BE HELD RESPONSIBLE FOR ANY HARM OR DAMAGE CAUSED BY DISREGARDING THE DESIGNATED USES OF THIS MACHINE, ITS INSTRUCTIONS AND WARNINGS INDICATED IN THIS BOOKLET.

2. Model Information

The SW116PHR Washers consist of a diaphragm pump complete with pressure regulating unit coupled to a 4 stroke combustion engine via a reduction gearbox.

	Model No.	SW116PHR
Pump Information	**Pump**	Comet MC18 Diaphragm Pump
	Speed	1450 RPM via Reduction Gearbox
	Body	Polypropylene
	Seals	Viton™
	Pressure Regulator	Integrated PRV with external bypass
Engine Information	**Engine**	Honda GX120
	Fuel	Petrol
	Net Power	3.5 Hp @ 3600 Rpm in accordance with SAE J1349
	Nominal Rpm	Engine 3600 - Pump
	Starting Method	Recoil start
	Fuel Tank	2 Litres
Water Connection	**Max Feed Temp**	40°C / 104°F
	Min Feed Temp	5°C / 41°F
	Min Feed Flow Rate	14.3 Lpm
	Max Feed Pressure	0.01 MPa - 0.1 Bar - 1.45 psi
	Max Suction Depth	1 Metre (3.3 Feet)
High Pressure Performance	**Flow Rate**	11 Lpm
	Working Pressure	0.6 MPa 6 Bar
	Pressure Outlet	Single Outlet
	Nozzle Jet Size	30 x 4 (PENCIL, 15°, 25°, 40°)
Sound Levels	**Uncertainty K**	1 dB
	SPL LWA dB*	62
	GSPL LWA dB**	99
Oils	**Pump Oil**	ENI Blasia S 150 (ISO-L-CKD)
	Gearbox Oil	ENI Grease MU EP
	Engine Oil	Refer to engine user manual
W&D	**Dimensions**	900L x 600W x 700H (mm)
	Weight	46 Kg

***SPL = Sound Power Level on equipment representative of this type**
****GSPL = Guaranteed Sound Power Level for this equipment.**

Notes

For the engine to reach it's maximum power, and the unit to achieve full rated performance, the machine must be run in for at least 10 hours. The engine's performance diminishes as altitude and ambient temperature increase. If the machine is to be used at altitude or with a high ambient temperature please refer to the engine user manual for guidance and any necessary precautions.

3. Intended Use

- The washer has been designed and manufactured for:
  - wash down of machinery, vehicles, buildings, facades, tools etc using clean, soft water at a maximum of 40°C and suitable detergents.
  - spraying of disinfectants and/or sanitizing products;
  - pumping detergents and colours in aqueous solution;
  - pumping water for non-edible use.
- The washer must not be used for pumping:
  - aqueous solutions with density and viscosity above that of water;
  - solutions of chemical products the compatibility of which with the materials making up the motor pump itself is not known;
  - seawater or water with high salt concentration;
  - fuels and lubricants of all kinds and types;
  - inflammable liquids or liquefied gases;
  - edible liquids;
  - solvents and thinners of all kinds and types;
  - paints of all kinds and types;
  - liquids with temperatures above 40 °C/104 °F or below 5°C/41°F;
  - liquids containing granules or solid parts in suspension.
- The washer must not be integrated in machines designed to wash: people, animals, energized electrical apparatus, delicate objects, the motor pump itself or the machine in which it is integrated.
- The washer is not designed to operate in environments with special conditions such as, for example, corrosive or explosive atmospheres.
- The washer is not designed to operate on board vehicles, ships, or planes.

All other uses are to be deemed incorrect.

The Manufacturer disclaims all liability for any damage deriving from incorrect or erroneous uses.

4. Component & Accessory Identification

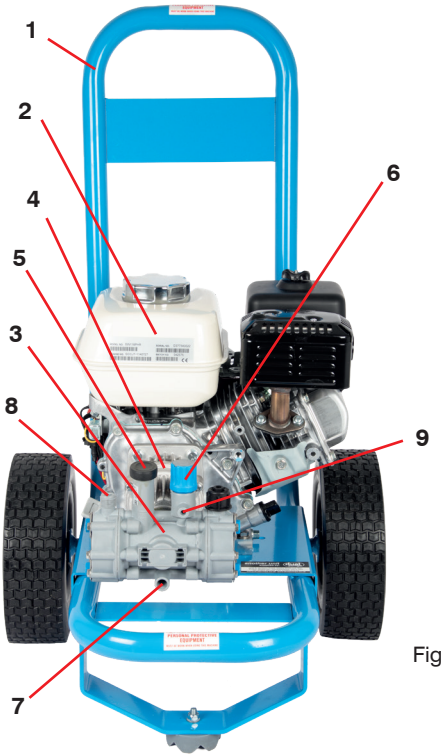

1	Trolley with 10" wheels
2	Engine
3	Pump
4	Mounting Flange/Gearbox
5	Pump oil filler cap
6	Pressure adjusting knob
7	Inlet feed barb
8	High pressure delivery outlet
9	Bypass outlet

Figure 1. Washer Components

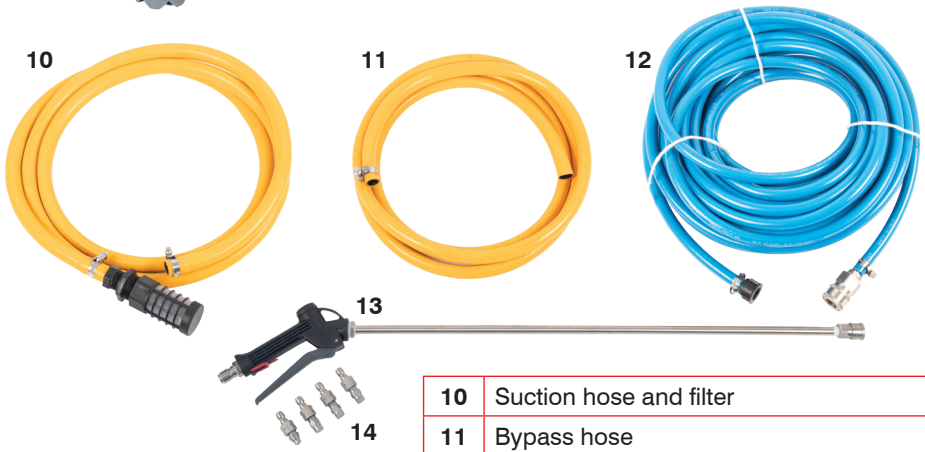

Figure 2. Standard accessories

10	Suction hose and filter
11	Bypass hose
12	25m delivery hose
13	Gun & lance assembly
14	0°, 15°, 25° & 40 ° quick release nozzles

5. Pre-Operation Set Up

- Unpack and make sure that the Washer is complete and undamaged. If the Washer appears damaged in any way, do not use the machine and consult your dealer.
- Check engine oil is at correct level as specified in the engine manufacturer's handbook.

Warning – Engines are not shipped filled with oil

The engine will not start until oil is added. Incorrect engine oil level can result in serious damage.

- Connect the suction hose & filter assembly (item 10, fig 2) to the inlet feed barb (item 7, fig 1). Ensure the connection has no air leaks and submerge the filter in water supply tank. For optimum performance ensure the supply tank is above the Washer to aid priming and water supply. Ensure the filter is always below the water level.
- Connect the bypass hose (item 11, fig 2) to the bypass outlet on the pressure regulating valve (item 9, fig 1) and put other end in to the top of the water supply tank.
- Connect the delivery hose (item 12, fig 2) to the delivery outlet (item 8, fig 1).
- Connect the gun and lance assembly (item 13, fig 2) to the delivery hose
- Fit desired quick release nozzle (item 14, fig 2) to the lance assembly outlet. The Washer is supplied with a selection of nozzles to give different fluid projection.
- When the pump is at a standstill, check the oil level is not above the notch on the case and is no more than 2-3mm below it. Always check the oil when the pump is at a standstill and has cooled down completely. Refer to Model Information (page 2) for type of oil to use.

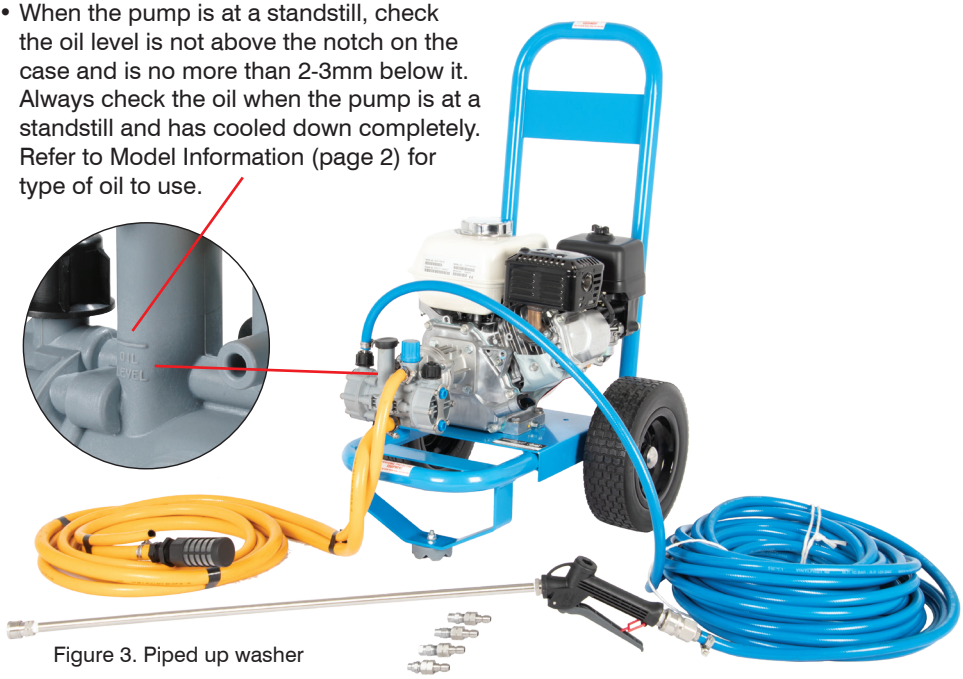

Figure 3. Piped up washer

6. Engine Start Up / Shut Down Procedure

- Consult the accompanying Honda user manual for full engine checks and start up and shut down procedure

Note – Before starting and after stopping the Washer depress the lance trigger to release system water pressure.

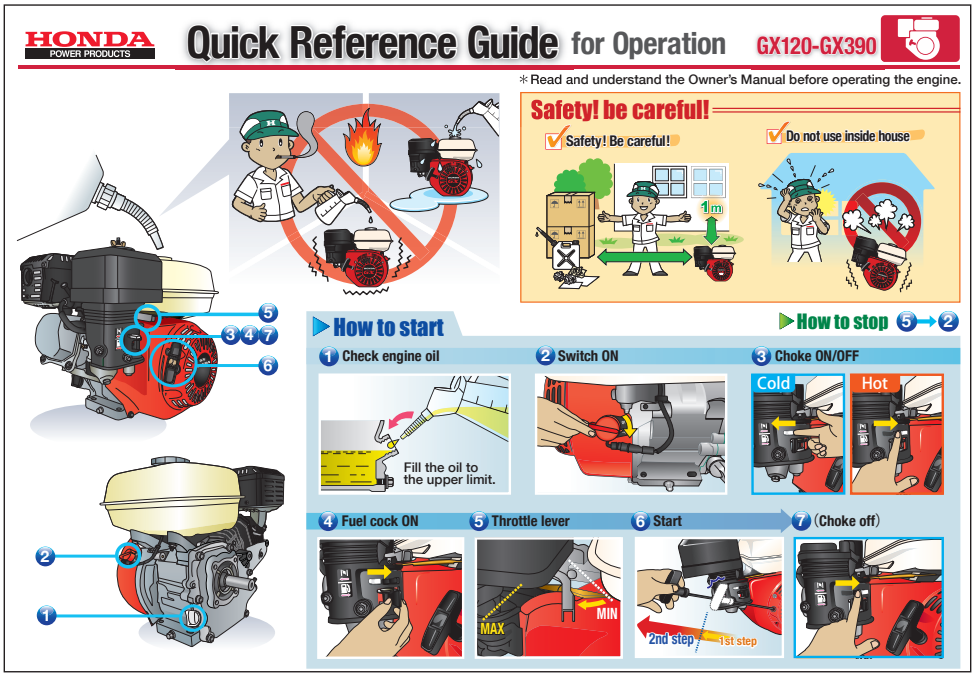

Warning – Chemicals can damage the pump and components.

The Washer must be flushed through with clean water after every period of use as chemicals and detergents can corrode the components.

7. Operating Information

Initial Priming

- Ensure the suction filter is fully submerged in the supply tank
- Hold lance trigger open and wait for water to make it's way up the suction hose and in to the Washer.
- After initial priming from the water supply tank the Washer is ready to run.

Pump Operation

- The motor pump can only be primed if the pressure of the delivery circuit is reset in the following way:

a) Fully turn the knob of the regulation valve (item 6, figure 1) anti-clockwise.

b) Start the pump to prime it.

c) Turn the knob (item 6, figure 1) until the water is delivered at the required pressure (turn clockwise to increase the pressure, turn anti-clockwise to decrease the pressure)

Stopping the Pump

⚠ Warning

- Always make sure that, once stop operations have been performed, no part of the motor pump and of the machine in which it is integrated is moving and no pipes contain liquid under pressure.

a) Turn off the delivery pressure as described in point a) in "Pump Operation" section.

b) Stop the pump.

c) Wait for the motor pump and the machine in which it is integrated to cool down.

General Use

- Open and close the lance trigger to start/stop the flow of water as required.
- The washer is fitted with a return-to-tank pressure regulating valve which bypasses excess fluid back to the supply tank during normal use and when the lance trigger is closed

NOTE – It is normal for a small amount of water to be bypassing even when the lance trigger is open.

- The pressure can be adjusted using the pressure adjusting knob (item 6, fig 1) on the pressure regulating valve.
- The Washer is supplied with a selection of nozzles to give different fluid projection.

⚠ Warning – Risk of damage to pump

Do not let the pump idle in bypass for long periods of time. Never leave the Washer running unattended.

8. Maintenance Schedule

Warning – Danger of personal injury.

Disconnect/remove the engine spark plug and ensure trapped pressure is released from the delivery hose before carrying out Washer maintenance. All service/maintenance tasks should be undertaken by a qualified technician.

General Maintenance

Activity	Daily	Initial 50 hours or 3 months	Every 100 hours or 12 months
Inspect / top up engine oil levels	✓		
Inspect all hoses and connections for tightness and damage	✓		
Inspect all auxiliaries & accessories tightness and damage	✓		
Inspect/change nozzle jets	✓		✓
Clean water inlet filters	✓		
Change Oil Refer to engine manufacturer's manual for oil change & service intervals			
Inspect/change engine drive key			✓

Refer to the pump and engine manufacturer's manuals for more information of service and maintenance.

Special Pump Maintenance

Warning

- Maintenance jobs must only be performed by a Skilled Technician.
- Used oil must be adequately disposed of and not discarded in the environment.

In relation to the pump, remember the following.

Maintenance Schedule	Job
Every 300 hours	• Check the pump suction/delivery valves and the control unit regulation valve. (*) • Oil change. (**)
At the end of the season or once a year	• Check and if necessary change the diaphragms. (***) • Check the tightness of the motor pump screws. • Check the safety devices.

(*) Checks must be more frequent if liquids are used with abrasive particles in suspension.
(**) The oil must be changed whenever the diaphragm is changed.
(***) If very aggressive chemical products are used, the diaphragms are best changed whatever their condition.

Caution

- The data shown on the chart are approximate. More frequent jobs may be necessary in case of particularly heavy-duty use.

9. Storage Information

The Washer & accessories should be stored in a dry and frost proof location. Frost can lead to serious component damage which is not covered by warranty.

Disconnect all hoses, lances & accessories and drain water.

Crank the engine over using the recoil start to expel water from pump.

Ensure all equipment is clean and dry.

When storing unit for extended periods of time add a fuel stabiliser to the fuel or drain the fuel from the tank. Refer to engine manufacturer's manual for information on how to prepare the engine for storage

10. Troubleshooting

⚠ Warning

- **Before doing any jobs, perform the operations described in the "Stopping the Pump" paragraph. In the event of not being able to restore the correct operation of the motor pump with the aid of the information contained on the "Washer & Pump Troubleshooting" table, contact a Skilled Technician.**

General Engine Troubleshooting

Refer to manufacturer's manual for full engine troubleshooting information.

Problem	Possible Cause	Remedy
Engine will not start	Engine switch in OFF position	Switch to ON position
	No or low oil level in engine	Fill engine crankcase to required level
	No or low fuel level	Fill fuel tank
	Stale or contaminated fuel	Drain fuel tank and replace with fresh fuel
	Bad spark	Check HT lead or replace spark plug
	Over-choking	Open choke and crank engine over
Engine falters or not running smoothly	Choke is opened too soon	Close choke until engine runs smoothly
Engine shuts down during operation	Out of fuel	Fill fuel tank
	No or low oil level in engine	Fill engine crankcase to required level
Engine lacks power	Throttle not fully open	Open throttle
	Dirty air filter	Replace air filter

Washer & Pump Troubleshooting

Refer to manufacturer's manual for full pump troubleshooting information.

Problems	Causes	Remedies
The pump does not prime.	Suction of air.	Check the integrity of the suction circuit.
	Regulation valve positioned under pressure.	Reset the pressure by means of the knob (item 6, figure 1)
The pump fails to reach max pressure.	Pressure adjustment knob (item 6, figure 1) not tightened enough.	Turn the knob clockwise until required pressure is achieved.
	Not enough water supply or priming too deep.	Make sure the water supply flow rate or priming depth is in compliance with the indications in the Model Information (page 2)
	Suction circuit blockages.	Check the suction circuit (especially make sure the suction filter is clean).
Irregular pressure and flow rate (pulsating).	Air suction.	Check the integrity of the suction circuit.
	Suction filter dirty.	Clean the filter.
	Not enough water supply or priming too deep.	Make sure the water supply flow rate or priming depth is in compliance with the indications in the Model Information (page 2)
	The motor pump has not completed priming.	Prime the pump according to the indications of the "Pump Operation" paragraph.
Too much noise.	Suction circuit blockages.	Check the suction circuit (especially make sure the suction filter is clean).
	Water supply temperature too high.	Keep to the temperatures indicated in the Model Information (page 2)
Too much oil used and/or whitish coloured oil (water in oil).	Breakage of one or more diaphragms.	Seek advice from a skilled technician
Failure to produce pressure, failure to produce flow or Fluctuating pressure	No nozzle fitted in lance assembly outlet	Fit desired nozzle
	Pressure regulator valve backed off	Wind adjuster knob in to pre-set maximum
	Blocked / worn nozzle	Clean / replace nozzle
	Leaks in delivery line	Tighten connections / replace damaged accessories
	Blockage in delivery line	Check / clear delivery outlet & hose

11. Warranty Information

Limited Warranty Supplied by Dual Pumps Ltd

Dual Pumps Ltd as suppliers warrants to the original purchaser, each new unit or other product supplied from its factory, for the period of twelve (12) months from the date of shipment from the factory, six (6) months for equipment on hire or rental), to be free from defects in material and workmanship under normal use and service. “Normal Use and Service” means not to exceed recommendations on maximum speeds, pressures and temperatures or handling fluids not compatible materials, as noted in the applicable Dual Pumps catalogue, technical literature and instructions. This warranty shall not apply to any pump or other product, which has been repaired or altered, to adversely affect the performance or reliability of the pump or product. Lance or hoses are not covered by this warranty due to the adverse conditions of their use.

Neither this warranty nor any implied warranty apply to damage caused by any of the following:

- Freight damage
- Frost or freezing damage.
- Damage caused by parts and/or accessories or components not obtained from or approved by Dual Pumps Ltd.
- Any consequential or incidental damage arising from the use of any, pump or other products supplied by Dual Pumps Ltd.
- Damage due to misapplication and/or misuse. The normal wear of moving parts or components affected by moving parts

The liability of Dual Pumps Ltd under the foregoing warranty is limited to the repair or replacement at Dual Pumps Ltd option without charge for labour, mileage costs or materials of any parts upon return of the entire pump or other product or of the particular part to the Dual Pumps Ltd factory within the warranty period at the sole expense of the purchaser, which part shall upon examination appear to Dual Pumps Ltd satisfaction to have been defective in material or workmanship.

The liability of Dual Pumps Ltd under any theory or recovery (except any express warranty where the remedy is set forth in the above paragraph) for loss, harm or damage, shall be limited to the lesser of the actual cost, harm or damage, or the purchase price of the involved pump or other product when sold by Dual Pumps Ltd to its customer. Dual Pumps Ltd expressly warrants its pumps or other products as above stated.

There are no other express warranties. Any implied warranties, including implied warranty of merchantability or of fitness for a particular purpose, are limited in duration to twelve (12) months from the date of the purchase by the original purchaser, (six (6) months for the equipment on hire or rental). There is no implied warranty of fitness for a particular purpose or merchantability when this product is put to rental use.
No person including any dealer or representative of Dual Pumps Ltd is authorised to make any representation or warranty concerning Dual Pumps Ltd products on behalf of Dual Pumps Ltd, or to assume for Dual Pumps Ltd the obligations contained in this warranty. Dual Pumps Ltd reserves the right to make changes in design and other changes and improvements upon its products without imposing any obligation on itself to install the same, in its existing products or products then in process or manufacture.

This warranty does not affect any statutory rights that you may have.

Procedure for claiming under this warranty

The claimant must despatch the unit, product or part at his own expense to the Dual Pumps Ltd factory with a full detailed report for inspection, upon receipt Dual Pumps Ltd will inspect and decide whether the unit, product or part is in fact a genuine warranty claim. Upon this decision the pump, product or part will be replaced either free of charge under this warranty or despatched and charged to the original customer together with a full report should it be found not to be covered by this warranty.

Warranty claimed items, if required urgently will be despatched to the customer and charged for, on receipt of the claimed defective item Dual Pumps Ltd will decide whether the claim is valid and if so will issue a credit for the item. Should Dual Pumps Ltd find the claimed item to be out of warranty declarations the said charge will stand and be paid by the customer as normal.

The copyright of this manual belongs to Dual Pumps Ltd and must not be copied or reproduced without the express permission of the company.

12. Environmental Protection



Old appliances contain valuable materials that can be recycled; these should be sent for recycling. Batteries, oil, and similar substances must not enter the environment. Please dispose of your old appliances using appropriate collection systems.

Please do not release engine oil, fuel oil, diesel and petrol into the environment. Protect the ground and dispose of used oil in an environmentally-clean manner.



The packaging material can be recycled. Please do not throw the packaging material into household waste; please send it for recycling.

13. EC Declaration of Conformity

Declaration of Conformity
Equipment Type
SW116PHR Washer
Relevant EU Directives
2006/42/EC - Machinery Directive
2000/14/EC - Low Voltage Directive
2014/30/EU - Electromagnetic Compatibility (EMC) Directive
Manufacturer
Dual Pumps Ltd, Unit 8 Hudson Road, Saxby Road Industrial Estate, Melton Mowbray, Leicestershire LE13 1BS. United Kingdom
Person authorised to compile the technical file & declaration
Tom Herridge, Product Manager
Signed -  CE

We hereby declare that the machine described above complies with the relevant basic safety and health requirements of the EU Directives, both in its basic design and construction as well as in the version put into circulation by us. This declaration shall cease to be valid if the machine is modified without our prior approval.



Unit 8, Hudson Road
Saxby Road Ind. Est.
Melton Mowbray
Leicestershire LE13 1BS

Telephone: +44 (0)1664 567226 Fax: +44 (0)1664 410127
E-mail: info@dualpumps.co.uk www.dualpumps.co.uk

DP-SW116PHR-V1.0-09/22